Motors | Automation | Energy | Transmission & Distribution | Coatings

WG20

Geared Motors up to 4500 Nm

Technical Catalogue

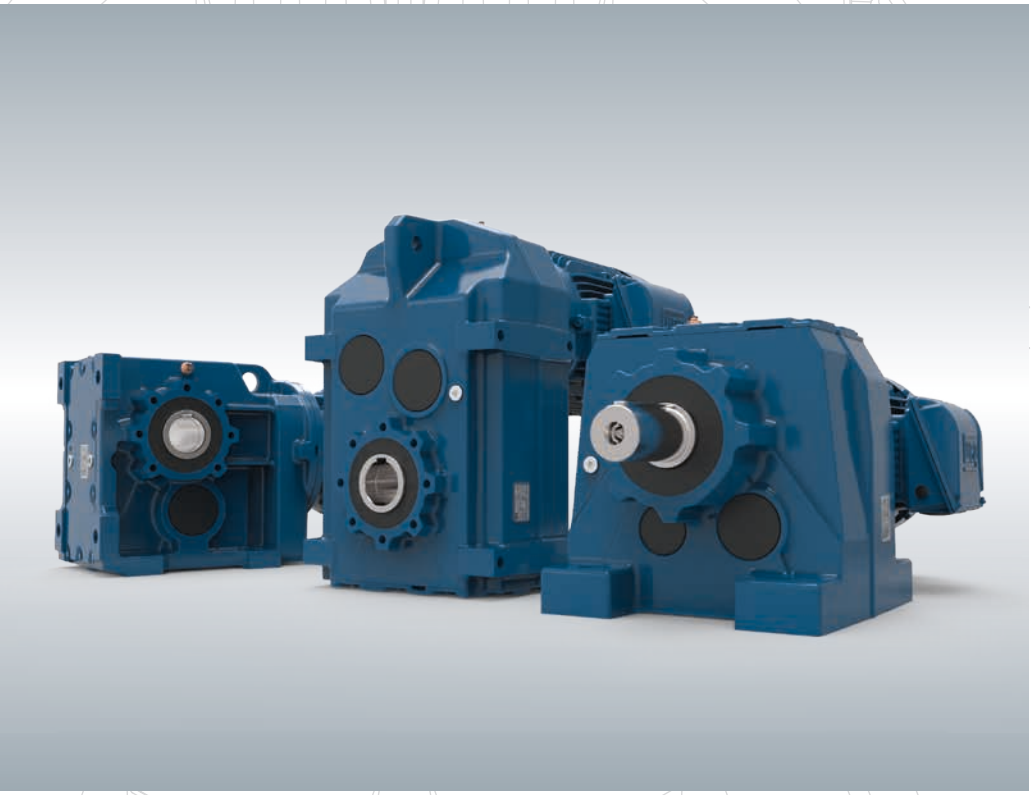

WEG Group - Transforming energy into solutions.

WEG is a leading global manufacturer and solutions provider of drive technology, energy production and distribution, and automation systems and switchgear construction.
Founded in Brazil in 1961 by three entrepreneurs, WEG has grown to become one of the most important global manufacturers of electric motors. WEG has more than 30,000 employees around the world. The annual turnover of around 3 billion euro reflects its increasing success. The company's global presence is supported by branches in 29 countries, production facilities, and a network of authorised dealers on all five continents.

Your **requirements** - our **expertise**

As one of the leading global manufacturers and solutions providers of drive technology, WEG's aim was to expand its extensive range of products by gear units produced in its own facilities. Perfect coordination of products throughout the drive train has put WEG in a position to offer customers even more superior and efficient solutions.

Under the leadership of Watt Drive, the challenge was to develop a program which not only meets the current demands of the market, but also satisfied WEG's high quality requirements. The Group's own centre of excellence for geared motors in Austria, part of the WEG Group since 2011, can draw on more than 40 years of experience in development, production and sales of gear units and geared motors.

In order to satisfy the requirements of state-of-the-art geared motors the following market requirements were taken into account during the development phase:

Standard mounting dimensions

For users, the aim was to make the new range of geared motors as easy and effortless to use as possible. To ensure installation in an existing system or production line worked effortlessly without incurring unnecessary costs for conversions, the developers decided to adapt the mounting dimensions of the new gear units to products already established on the market. The objective: worldwide, easy and cost-effective interchangeability.

Torque transmission

The gear units needed to be compact, efficient, robust and reliable. In order to achieve this goal a transmission had to be designed which allows large ratio ranges in a two-stage model while being able to integrate easily into the new design gear housing.

Efficiency

Energy efficiency has always been of paramount importance to WEG. The aim here was to live up to this demand when designing the new WG20 geared motors. This requires the perfect interaction of sophisticated technology and exclusive use of high quality components.

Worldwide use

To meet the requirements of global mechanical and plant engineering, it was vital that the new geared motors can be used worldwide, whilst maintaining a high level of flexibility for applications.

The solution is **WG20**.

Easy **product selection**

The “cat4CAD®” product configuration tool makes it easy to interactively select products. Comprehensive wizards, user-friendly navigation and many other extra features allow quick configuration of the required drive.

Advantages

- Extensive product library
- Fast configuration of motors and geared motors
- Creation of project files with comprehensive technical documentation
- Easy modification of generated product data by means of the project file
- Quick request times

Features

- The entire menu is available in many languages.
- To-scale 2D/3D drawings and PDF and DXF dimension sheet drawings of the previously selected drive.
- The 2D/3D data can be exported for use in standard CAD programs.
- Comprehensive technical data sheets of the configured gear unit and motor at the click of a button.
- The project file allows complete management of previously selected drives on one screen.
  At the click of a button one can save or print this project file, create PDF and DXF dimension drawings, and send enquiries directly to our sales team.

Online version available at www.cat4cad.com

Offline version for download at www.wattdrive.com

WG20 - Geared motors up to 4500 Nm

WG20 is the first geared motor range to be completely developed in-house at WEG. The second stage of extension comprises helical, parallel shaft and helical bevel gear units with torques between 50 and 4500 Nm. Already the two-stage units excel with their large ratio range, as well as being exceptionally efficient thanks to the sophisticated design. The light aluminium housings of the gear units up to 600 Nm and the robust cast iron housings from 800 Nm provide a highly versatile and reliable product, with a wide range of possible applications.

WG20's final stage of extension will feature geared motors up to 18,000 Nm.

Helical geared motors C

Nominal torque: 50 - 4500 Nm

Power range: 0.12 - 30 kW

Ratio range: 2.44 - 375.71

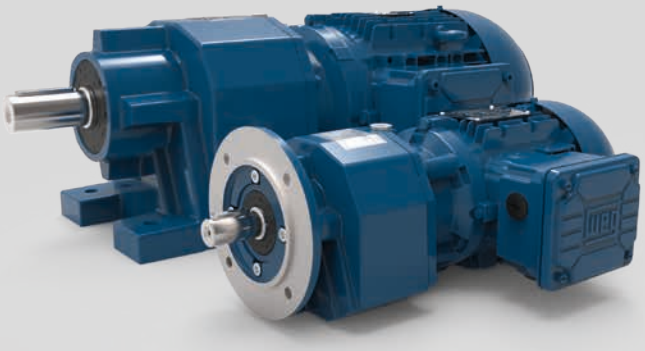

Parallel shaft geared motors F

Nominal torque: 130 - 4500 Nm

Power range: 0.12 - 30 kW

Ratio range: 3.85 - 487.67

Helical bevel geared motors K

Nominal torque: 110 - 4500 Nm

Power range: 0.12 - 30 kW

Ratio range: 3.82 - 277.79

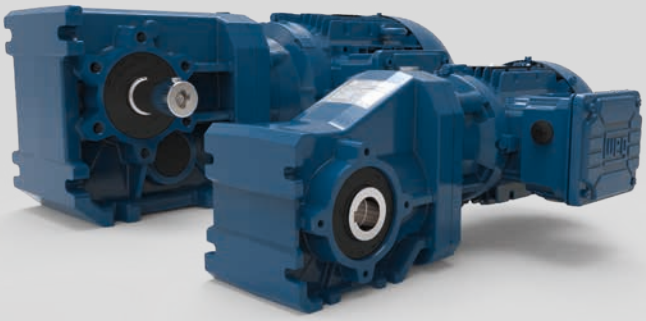

Table of Contents

Drive calculation 8
1. Drive power 8
2. Load types 10
3. Service factor 10
Thermal power limit 11
Table of lubricants 12
Painting 12
Degrees of protection 13

Helical geared motors C 15

Technical Data 16
General information 16
1. Nameplate 16
2. Type code 17
3. Range 18
4. Design 18
5. Venting the gear unit 18
6. Overhung and axial loads 18
7. Mounting positions, Position of the terminal box and Cable entry 20
Selection tables - Geared motors 25
Selection tables - Gear units 69
Dimension sheets 79

Parallel shaft geared motors F 99

Technical Data 100
General information 100
1. Nameplate 100
2. Type code 101
3. Range 102
4. Design 102
5. Venting the gear unit 102
6. Overhung and axial loads 102
7. Mounting positions, Position of the terminal box and Cable entry 104
Selection tables - Geared motors 107
Selection tables - Gear units 147
Dimension sheets 155

Helical bevel geared motors K 173

Technical data 174
General information 174
1. Nameplate 174
2. Type code 175
3. Range 176
4. Design 176
5. Venting the gear unit 176
6. Overhung and axial loads 176
7. Mounting positions, Position of the terminal box and Cable entry 178
Selection tables - Geared motors 181
Selection tables - Gear units 217
Dimension sheets 225

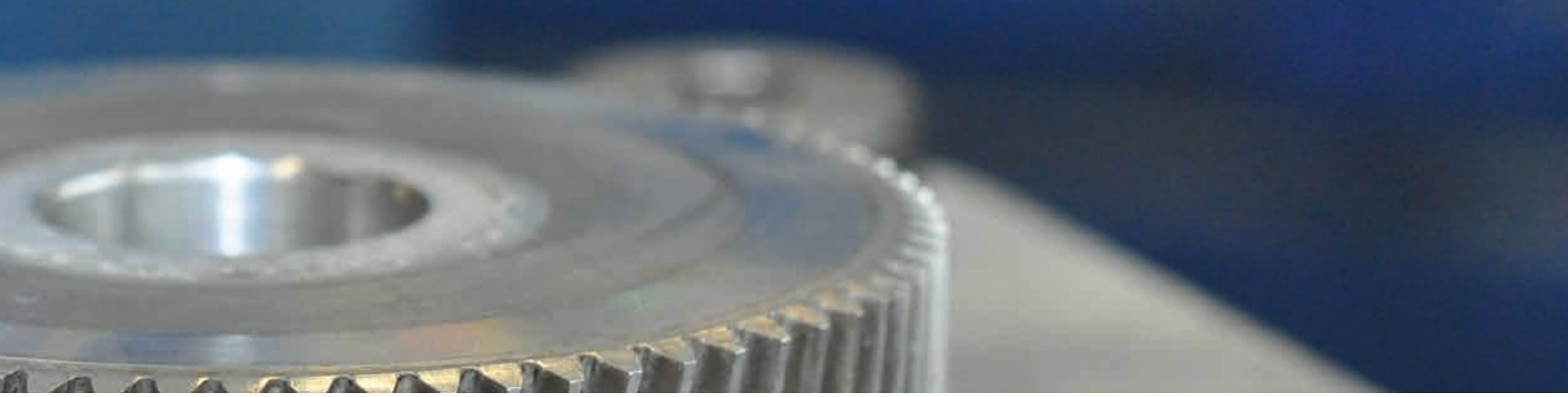

Modular System Motor 243

The modular motor system 245
The modular system motor 246
Type code 247
Options 248
1. Basic execution 248
2. Electrical options 248
3. Mechanical options 248
4. Options - motor modules 249
5. Additional options 250
General information 250
1. Voltage and frequency fluctuations 251
2. Modes of operation 251
3. Rated power according to VDE 0530-1 252
4. Nameplate 252
5. Torque 252
6. Efficiency class 252
7. Motor protection 253
8. Overload protection (protection relay) 253
9. Speed and rotation direction 253
10. Cable entry 253
11. Cooling 253
12. Insulation 253
13. Noise levels 254
14. Balancing of rotors 254
15. Shaft ends 254
16. Voltage, current and frequency 254
17. Electrical connection 254
18. Variable speed drive application 255
Electrical basic data 257
Dimension sheets 266
Motor modules 271
Temperature control 271
Anti-condensation heating 271
Climatic protection 272
Drain 272
Terminal box designs 272
Brake system and Back stop 275
Encoder systems 286
Ventilation systems 289
Additional modules 291
Standards 292

Disclaimer

This catalogue contains information (descriptions and characteristics), which do not always apply as described in case of actual use. Data can also change due to product development. Characteristics are only binding if explicitly agreed to in the contract. Delivery opportunities and technical modifications subject to change without notice.

Drive calculation

1. Drive power

The required total power is divided into static and dynamic components. The static power is the component at constant speed (friction and lifting force). The dynamic component is the power for accelerating and decelerating of masses.
The selected rated motor power (P_N) must be bigger than the required static drive power. The required total power can be bigger than the rated motor power but it must be smaller than the maximum motor power.

	Formula	Unit
Output speed of the gear unit	$n_2 = \frac{v \cdot 30}{\pi \cdot r}$	[min^{-1}]

Static drive power		
Linear movement Horizontal movement (conveyor, travel drive)	$P_{stat} = \frac{m \cdot g \cdot \mu \cdot v}{1000 \cdot \eta}$	[kW]
Inclined movement (inclined conveyor, travel drive with inclination)	$P_{stat} = \frac{m \cdot g \cdot v \cdot (\sin\alpha + \mu \cdot \cos\alpha)}{1000 \cdot \eta}$	[kW]
Vertical movement (lifting drive, hoist, bucket elevator)	$P_{stat} = \frac{m \cdot g \cdot v}{1000 \cdot \eta}$	[kW]
Static output torque	$M_{2stat} = \frac{P_{stat} \cdot 9550}{n_2}$	[Nm]

Dynamic drive power (acceleration/deceleration power)		
Horizontal movement	$P_{dyn,A,(B)} = \frac{m \cdot v^2}{1000 \cdot t_{A,(B)} \cdot \eta)}$	[kW]
Rotary motion	$P_{dyn,A,(B)} = \frac{\Sigma J_{red.} \cdot n_1^2}{9{,}12 \cdot 10^4 \cdot t_{A,(B)} \cdot \eta}$	[kW]
Starting resp. braking time	$t_{A,(B)} = \frac{\Sigma J_{red.} \cdot n_1}{9{,}55 \cdot (M_{A,(B)} \pm M_L)}$	[s]
Minimum starting time against slipping	$t_{Amin} = \frac{v}{\mu_0 \cdot g}$	[s]
Load torque of motor	$M_L = \frac{M_{2stat}}{i}$	[Nm]
Starting power	$P_A = P_{dyn,A} + P_{stat}$	[kW]
Braking power	$P_B = P_{dyn,B} \pm P_{stat}$	[kW]
Starting / braking torque	$M_{2,A,(B)} = \frac{P_{A,(B)} \cdot 9550}{n_2}$	[Nm]

$+M_L$ for braking when the load acts braking (e.g. lifts when going up)
$-M_L$ for starting or for braking when the load acts accelerative (e.g. lifts when going down)

Mass moments of inertia

External load moments of inertia have to be reduced onto the motor shaft by squared ratios.

Reduced mass moment of inertia	$J_{ex.red.} = \frac{J_{ex}}{i^2}$	[kgm²]
Solid cylinder 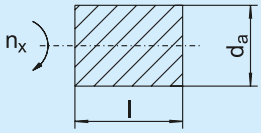	$J_{ex.red.} = 98{,}2 \cdot \rho \cdot l \cdot d_a^4 \cdot (\frac{n_x}{n_1})^2$	[kgm²]
Hollow cylinder 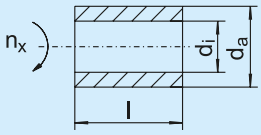	$J_{ex.red.} = 98{,}2 \cdot \rho \cdot l \cdot (d_a^4 - d_i^4) \cdot (\frac{n_x}{n_1})^2$	[kgm²]
Linear movement 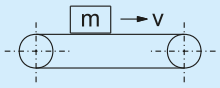	$J_{ex.red.} = 91{,}2 \cdot m \cdot (\frac{v}{n_1})^2$	[kgm²]

Approximate values for friction coefficients:

Rolling friction:
- $\mu_r = 0.005 - 0.02$ steel/steel
- $\mu_r = 0.02 - 0.06$ plastic/steel
- $\mu_r = 0.06 - 0.2$ rubber/steel

Static friction:
- $\mu_0 = 0.15$ steel/steel

Friction coefficient for conveyors:
- $\mu_r = 0.13$ 10 m conveyor length
- $\mu_r = 0.08$ 25 m conveyor length
- $\mu_r = 0.06$ 50 m conveyor length
- $\mu_r = 0.05$ 100 m conveyor length

Designation	Unit	Description
d_a	[m]	Outside diameter
d_i	[m]	Inside diameter
f_B		Service factor
F_I		Inertial factor
g	[m/s²]	Acceleration due to gravity
i		Gear ratio
$J_{ex.red.}$	[kgm²]	All external mass moments of inertia corrected to motor input
J_{ex}	[kgm²]	All extern mass moments of inertia
J_{mot}	[kgm²]	Mass moment of inertia of the motor
$\Sigma J_{red.}$	[kgm²]	Sum of all J_{red} values
l	[m]	Length
m	[kg]	Mass
$M_{2,A}$	[Nm]	Output torque of gear unit for starting
$M_{2,B}$	[Nm]	Output torque of gear unit for braking
M_{2Nenn}	[Nm]	Permissible output torque
M_{2stat}	[Nm]	Static output torque
M_A	[Nm]	Starting torque of the motor (see motor electric data sheets from page 257)
M_B	[Nm]	Brake torque

Designation	Unit	Description
M_L	[Nm]	Load torque of motor
n_1	[min⁻¹]	Input speed (motor speed)
n_2	[min⁻¹]	Output speed (gear unit)
n_x	[min⁻¹]	Speed of calculated components
P_A	[kW]	Power of gear unit at start
P_B	[kW]	Power of gear unit at stop
P_{stat}	[kW]	Static power
$P_{dyn,A}$	[kW]	Dynamic acceleration power
$P_{dyn,B}$	[kW]	Dynamic deceleration power
r	[m]	Sprocket / roller radius
t_{Amin}	[s]	Minimum starting time with risk of slip
t_A	[s]	Starting time
t_B	[s]	Braking time
v	[m/s]	Linear velocity
α	[°]	Angle of inclination
η		Efficiency of the gear unit, system
μ		Coefficient of friction
μ_0		Coefficient of static friction
μ_r		Coefficient of rolling friction
ρ	[kg/dm³]	Density (steel=7.85 kg/dm³)

2. Load types

Load type A	Load type B	Load type C
Uniform load, small masses to be accelerated, no shocks	Non-uniform load, medium masses to be accelerated, medium shocks	Extremely rough conditions, high masses to be accelerated, heavy shocks and alternating load
Examples: Continuous conveyor for bulk goods, light conveyors, blowers, centrifugal pumps, light elevators, screw conveyors, fluid agitators	Examples: Bucket conveyors, rotary furnaces, printing and dyeing machines, conveyor drums, centrifugal pumps and semi-fluid good agitators, wood working machines, elevators, screw conveyors, concrete mixers	Examples: Ramming machines, calenders, duty rolling mills, presses, heavy mixer, stone crushers, shredders, heavy winches and lifts

3. Service factor

The gear unit required can be selected from the following tables showing the power, torque and output speed options. All our gear units are adequately dimensioned for long-life industrial applications and are designed for continuous loading under uniform operating conditions with small masses to be accelerated. Operating times of 8-10 hours a day are considered standard. No drive can be built to withstand all possible conditions, therefore the load conditions at the site have to be determined accurately and the proper load type identified. After determining the daily operating hours, selecting the type and establishing the number of starts (c/h), see the following diagram to find out the necessary service factor f_B. The inertial factor F_I assists in evaluating and attributing the masses to be accelerated. The service factor given in the tables indicates the reserve load in the rated torque for the specific gear unit.

In the tables you can usually choose between two types of gear units with the same or similar speeds, but different service factors. When you select the correct gear unit, the f_B from the diagram below should always be less than or equal to the available f_B (from the selection tables) for the chosen type. For short time operation, you can sometimes select a maller gear unit, while for peak operation, a large number of starts or 24-hour continuous operation, a larger type is necessary. The output speed figures shown in the selection tables have been rounded up or rounded off. They may however vary due to the motor size and are valid for nominal load. Deviations of +/- 3 % are permissible.

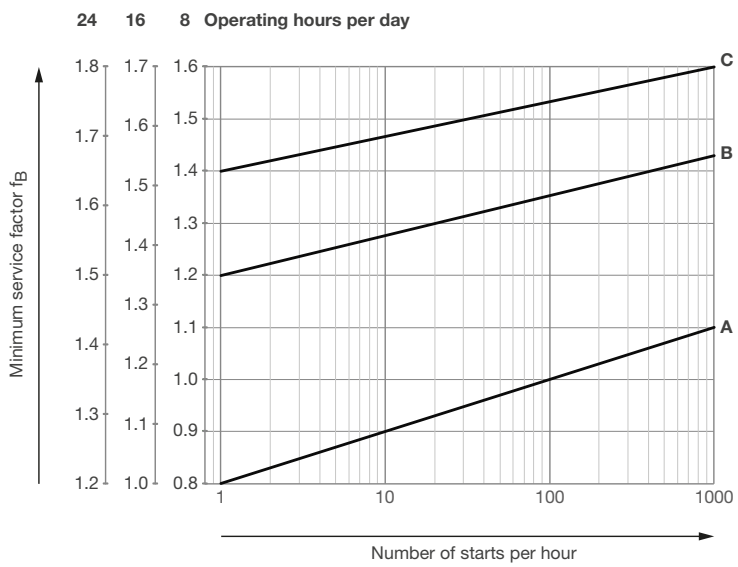

	Formula	Unit
Service factor	$f_B = \frac{M_{2Nenn}}{M_{2stat}}$	
Inertial factor	$F_I = \frac{\Sigma J_{ex.red} + J_{mot}}{J_{mot}}$	[min^{-1}]

Modes of operation DIN EN 60034-1 see page 251.

Legend see page 9.

Thermal power limit

The thermal power limit P_t must always be taken into account when designing a drive. It represents the maximum input power which can be transmitted by the gear unit at the given ambient temperature in a continuous operation mode (S1).

The technical data of the geared motors shown in the selection tables apply to an ambient temperature of +20 °C. Thermal power limits for other temperatures can be seen in the table below.

Parameters to be considered:

- Higher / lower temperatures
- Vertical mounting positions (M2 or M4)
- Higher speed (> 1500 rpm) due to e.g. use of frequency inverter
- Small ratios
- Little mounting space

For such conditions we recommend consulting WEG. The geared motors can be adapted according to customer requirements by using e.g. lubricant expansion, optimised oil quantities, synthetic oils or Viton seal rings.

Gear size	Ambient temperature								
	-20 °C	-10 °C	0 °C	+10 °C	+20 °C	+30 °C	+40 °C	+50 °C	+60 °C
C002	2.5	2.1	1.8	1.5	1.2	1.0	0.7	0.5	0.3
C012	5.0	4.3	3.6	3.0	2.5	2.0	1.5	1.1	0.7
C032	10.1	8.7	7.4	6.2	5.0	4.0	3.0	2.1	1.3
C033	6.1	5.2	4.5	3.7	3.0	2.4	1.8	1.3	0.8
C052	18.9	16.3	13.9	11.6	9.5	7.5	5.7	4.0	2.5
C053	11.4	9.8	8.4	7.0	5.7	4.5	3.4	2.4	1.5
C062	25.9	22.4	19.0	15.9	13.0	10.3	7.8	5.5	3.5
C063	15.7	13.5	11.5	9.6	7.8	6.2	4.7	3.3	2.1
C072	33.6	29.0	24.6	20.6	16.8	13.3	10.1	7.2	4.5
C073	20.3	17.5	14.9	12.4	10.2	8.1	6.1	4.3	2.7
C082	57.7	49.8	42.4	35.4	28.9	22.9	17.4	12.3	7.7
C083	34.9	30.1	25.6	21.4	17.5	13.8	10.5	7.4	4.7
C092	81.7	70.5	60.0	50.2	41.0	32.5	24.6	17.5	11.0
C093	49.4	42.6	36.2	30.3	24.7	19.6	14.9	10.5	6.6
C102	102.7	88.6	75.4	63.0	51.5	40.8	30.9	21.9	13.8
C103	62.0	53.5	45.5	38.0	31.1	24.6	18.7	13.2	8.3
F022	7.3	6.3	5.4	4.5	3.7	2.9	2.2	1.6	1.0
F032	11.3	9.7	8.3	6.9	5.7	4.5	3.4	2.4	1.5
F042	17.8	15.4	13.1	10.9	8.9	7.1	5.4	3.8	2.4
F043	10.8	9.3	7.9	6.6	5.4	4.3	3.2	2.3	1.4
F052	24.4	21.0	17.9	14.9	12.2	9.7	7.3	5.2	3.3
F053	14.7	12.7	10.8	9.0	7.4	5.8	4.4	3.1	2.0
F062	30.7	26.5	22.6	18.9	15.4	12.2	9.3	6.6	4.1
F063	18.6	16.0	13.6	11.4	9.3	7.4	5.6	4.0	2.5
F072	50.8	43.9	37.3	31.2	25.5	20.2	15.3	10.9	6.8
F073	30.7	26.5	22.5	18.8	15.4	12.2	9.2	6.6	4.1
F082	73.2	63.2	53.7	44.9	36.7	29.1	22.0	15.6	9.8
F083	44.2	38.1	32.5	27.1	22.2	17.6	13.3	9.4	5.9
F092	106.7	92.1	78.3	65.5	53.5	42.4	32.1	22.8	14.3
F093	64.4	55.6	47.3	39.5	32.3	25.6	19.4	13.8	8.6
K022	10.1	8.8	7.4	6.2	5.1	4.0	3.1	2.2	1.4
K033	10.0	8.6	7.3	6.1	5.0	4.0	3.0	2.1	1.3
K043	15.9	13.7	11.7	9.8	8.0	6.3	4.8	3.4	2.1
K053	20.9	18.0	15.3	12.8	10.5	8.3	6.3	4.5	2.8
K063	23.4	20.2	17.2	14.3	11.7	9.3	7.0	5.0	3.1
K073	37.4	32.3	27.4	22.9	18.7	14.8	11.3	8.0	5.0
K083	44.0	38.0	32.3	27.0	22.1	17.5	13.3	9.4	5.9
K093	61.1	53.6	45.6	38.1	31.1	24.6	18.7	13.3	8.3

Thermal power limit P_t [kW]

Table of lubricants

Recommended ambient temperatures	-10 °C ... +60 °C	-20 °C ... +80 °C	-25 °C ... +60 °C	-40 °C ... +20 °C	-20 °C ... +40 °C
DIN (ISO)	CLP (mineral oil) [1]	CLP PG (polyglycol oil)	CLP PG (polyglycol oil)	CLP-HC (polyalphaolefin oil) [2]	food grade
ISO VG	220	460	220	220	220
ARAL	Degol BG 220	Degol GS 460	Degol GS 220	Degol PAS 220	-
BP	Energol GR-XP 220	Enersyn SG-XP 460	Enersyn SG-XP 220	Enersyn HTX 220	-
Castrol	Alpha SP 220	Alphasyn PG 460	Alphasyn PG 220	Alphasyn HTX 220	Optileb GT 220
Klüber	Klüberoil GEM 1-220 N	Klübersynth GH 6-460	Klübersynth GH 6-220	Klübersynth GEM 4-220 N	Klüberoil 4UH1 220 N
Mobil	Mobilgear 600 XP 220	Glygoyle 460	Glygoyle 220	SHC 630	SHC Cibus 220
Shell	Omala S2 G 220	Omala S4 WE 460	Omala S4 WE 220	Omala S4 GX 220	-
Addinol	Gear Oil 220 F	Poly Gear PG 460	Poly Gear PG 220	Eco Gear 220 S	Ecoleb 220 FG

1) standard lubricant acc. to DIN 51517 part 3 - CLP ISO VG 220
2) note critical starting behaviour at low temperatures

Painting

Standard colour geared motors: RAL 7011 (RAL 5009, RAL 9005 and RAL 9007 without additional costs)

In addition to the standard high-grade polyurethane-based surface finish other special finishes for applications that are subject to specific environmental conditions are offered. Paintwork is basically categorised according to the composition of the applied surface finish. The standard program contains 6 painting systems categorised from LA0 to LC5. Special colours are possible.

Painting system	Application	Layering	NDFT Nominal dry film thickness	Temperature range	Corrosion category DIN EN ISO 12944-5
not painted					
LA0	Primer	Dip primer Base coat (2 pack PUR)		-40 °C - +120 °C	
LC1 (Standard)	**Indoor installation, neutral atmosphere**	**Dip primer Varnish (2 pack PUR)**	**60 µm**	**-40 °C - +120 °C**	**C1**
LC2	Protected outdoor installation, neutral atmosphere	Dip primer 2x Varnish (2 pack PUR)	140 µm	-40 °C - +120 °C	C2
LC3	Outdoor installation, industrial atmosphere	Dip primer Base coat (2 pack PUR) Varnish (2 pack PUR)	160 µm	-40 °C - +120 °C	C3
LC4	Outdoor installation, aggressive atmosphere	Dip primer Base coat (2 pack PUR) Intermediate base coat (2 pack PUR) Varnish (2 pack PUR)	240 µm	-40 °C - +120 °C	C4
LC5	Coast or offshore, very aggressive atmosphere, under water	Dip primer Base coat (2 pack PUR) Intermediate base coat (2 pack PUR) Varnish (2 pack PUR)	320 µm	-40 °C - +120 °C	C5-I/C5-M

Degrees of protection

Degree of protection according to DIN EN 60034-5.
The designation to indicate the degrees of protection consists of the characteristic letters IP followed by two numerals.
Code figure 1: degree of protection against contact with live or moving parts and against ingress of solid foreign objects
Code figure 2: degree of protection against harm for ingress of water

Degree of protection:
Modular system motor: IP55 (standard) to IP67
Brake: IP55 (standard) to IP66
Gear unit: IP65 (standard) to IP68

Code figure 1	
	Description
0	No protection
1	Protected against solid foreign objects of 50 mm diameter and larger: the probe (50 mm ball) may not fully penetrate.
2	Protected against solid foreign objects of 12.5 mm diameter and larger: the probe (ball 12.5 mm) shall not fully penetrate.
3	Protected against solid foreign objects of 2.5 mm diameter: the probe (ball 2.5 mm) must not penetrate at all.
4	Protected against solid foreign objects of 1 mm and larger: the probe (1 mm ball) must not penetrate at all.
5	Dust protected: ingress of dust is not totally prevented, but dust shall not penetrate in a quantity that the operation of the device is affected or to impair safety.
6	Dustproof: no ingress of dust at underpressure of 20 mbar in the housing

Code figure 2	
	Description
0	No protection
1	Protected against dripping water: vertically falling drops may not have any harmful effects.
2	Protected against dripping water when the housing is inclined up to 15°: vertically falling drops may not have any harmful effects when the housing is inclined up to 15° from the vertical.
3	Protected against water spray: water sprayed at an angle up to 60° on both sides of the vertical may not have any harmful effects.
4	Protected against splash water: water splashed against the housing from any direction may not have any harmful effects.
5	Protected against water jets: water that is from any direction in jets against the housing may not have any harmful effects.
6	Protected against strong water jets: water that is from any direction in powerful jets against the housing may not have any harmful effects.
7	Protected against the effects of temporary immersion in water: water must not enter in quantities causing harmful effects, if the housing is under standardised conditions of pressure and time temporarily submerged in water.
8	Protected against the effects of continuous immersion in water: water must not enter in quantities causing harmful effects when the enclosure is permanently submerged in water under conditions to be agreed between manufacturer and user. The conditions must be more stringent than for index.

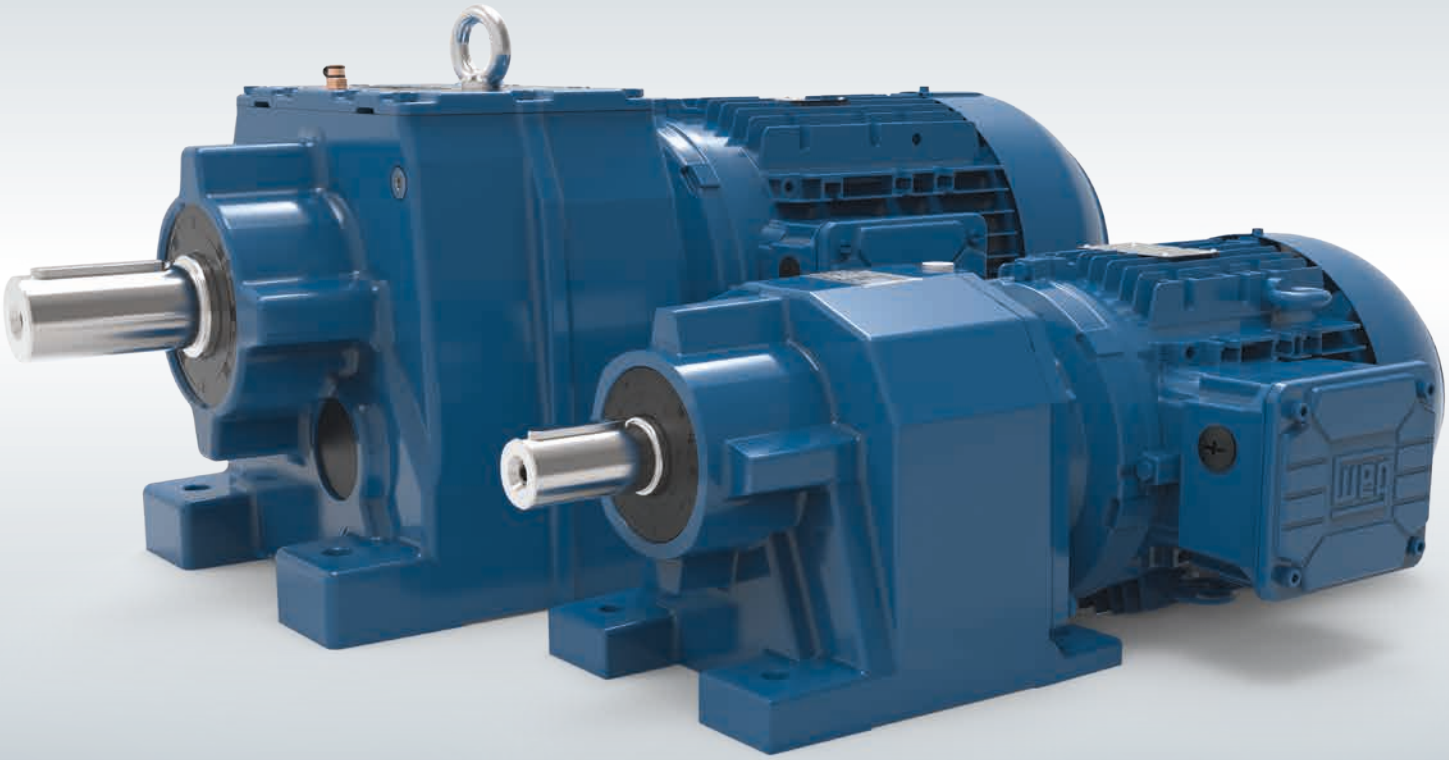

Helical geared motors C

Technical Data

Size		C00	C01	C03	C05	C06	C07	C08	C09	C10
Power		0.12 - 0.75 kW	0.12 - 1.5 kW	0.12 - 3 kW	0.12 - 7.5 kW	0.12 - 9.2 kW	0.12 - 15 kW	0.18 - 22 kW	0.55 - 30 kW	1.1 - 30 kW
Torque		50 Nm	85 Nm	200 Nm	400 Nm	600 Nm	820 Nm	1550 Nm	3000 Nm	4500 Nm
Ratio		2.44 - 47.44	3.09 - 66.5	3.34 - 286.32	3.83 - 328.43	3.73 - 375.71	5.30 - 351.33	5.12 - 368.94	4.22 - 306.73	4.19 - 246.43
Number of stages		2	2	2 / 3	2 / 3	2 / 3	2 / 3	2 /3	2 / 3	2 / 3
Housing material		aluminium					cast iron			
Solid shaft	Type	with key acc. to DIN 6885.1 and threaded bore acc. to DIN 332 sheet 2								
	Tolerance	< Ø 55: k6 / ≥ Ø 55: m6								
	Material	standard: C45E (1.1191) / stainless steel on request								
Flanges	Tolerance	centring ≤ 250: j6 / > 250: h6 acc. to DIN EN 50347								
	Material	cast iron								
Gear wheels	Type	honed								
	Material	16MnCr5 (1.7131) case hardened – minimum 58HRC								
Shaft seals	Type	type AS acc. to DIN 3760								
	Material	standard NBR / special FKM								
Bearing		standard / reinforced								
Lubricants	Type	standard CLP 220 / special CLP HC 220								
	Quantity	depending on mounting position								
Axle height		acc. to DIN 747: ≤ 50: -0.4; > 50 to ≤ 250: -0.5; > 250: -1 **for foot-mounted geard motors, the motor may extend below the mounting surface**								

C

General information

1. Nameplate

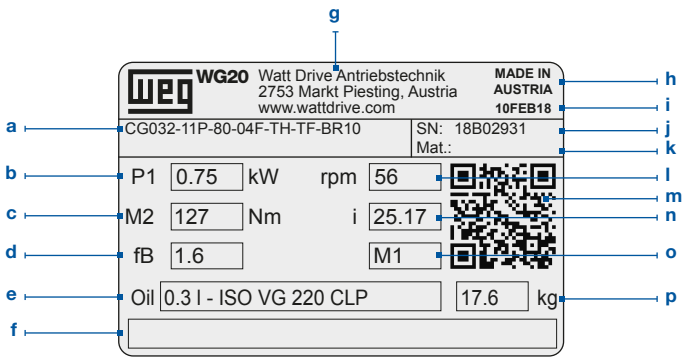

a	Type code	i	Production date
b	Motor power	j	Serial number
c	Output torque	k	Material number
d	Service factor	l	Output speed
e	Type and quantity of lubricant	m	QR-Code linked online to additional information
f	Space for additional information	n	Total gear ratio
g	Manufacturer address	o	Mounting position
h	Country of origin	p	Weight

2. Type code

CG083-11P-90S/L-04F ...

1 2 3 4 5 6 7 8 9

1	Type:	C = Helical gear unit
2	Design:	A = Foot mounted and B5 flange execution with output shaft C = B14 flange execution with output shaft F = Flange execution with output shaft G = Foot mounted with output shaft W = Foot mounted and B14 flange execution with output shaft
3	Size:	00 01 03 05 06 07 08 09 10
4	Number of stages:	2 = 2 gear stages 3 = 3 gear stages
5	Motor type:	11N = Integral motor aluminium IE1 11P = Integral motor aluminium IE3 22P = Integral motor cast iron IE3
6	Motor frame size:	63 71 80 90S/L 100L L100L 112M 132S 132M L132M 160M 160L 180M 180L 200L
7	Number of poles:	04 = 4 poles 06 = 6 poles
8	Power indicator:	D E F G
9	Motor modules:	see from page 271

3. Range

Size	C00	C01	C03	C05	C06	C07	C08	C09	C10
Housing material	Aluminium					Cast iron			

4. Design

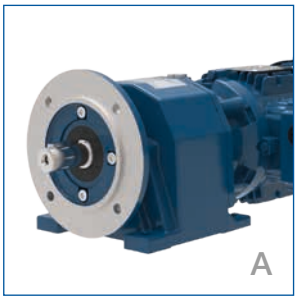

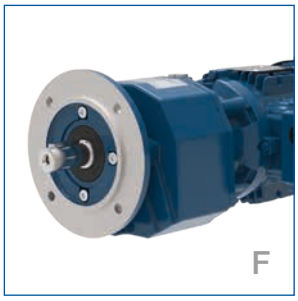

A	Foot mounted and B5 flange execution with output shaft
C	B14 flange execution with output shaft
F	Flange execution with output shaft
G	Foot mounted with output shaft
W	Foot mounted and B14 flange execution with output shaft

5. Venting the gear unit

The helical gear unit sizes C00 to C06 are neither equipped with a venting nor an oil drain screw. They are supplied with lifetime-lubrication.
By default, the helical gear units C07 to C10 are equipped with venting screws with a safety strap for transportation (see illustration). The rubber strap (a) of the venting screw must be removed entirely before the initial startup. The venting screw is placed accordingly to the mounting position (see chapter Mounting positions, page 22).

6. Overhung and axial loads

The overhung loads (F_{rN}) indicated in the respective selection tables apply to gear units with the force acting on the shaft center (x=l/2). The permissible overhung loads listed are based on the least favourable loading direction and calculated for standard shafts and standard bearings. Other load directions and action can be calculated with equations Q1 to Q3. If transmission elements are placed on the output shaft, an appropriate factor (f_z) has to be taken into consideration when determining the overhung load.

Gear wheels	Sprockets		V-belts	Flat belts
f_z=1.1 (z≤17)	f_z=1.2 (z≤13)	f_z=1.1 (z>13)	f_z=1.8	f_z=2.5

Use the following equations Q1 and Q2 to calculate the permissible radial loads on the output shaft. Q3 is to calculate the real existing shaft loads for your application. The results are to be compared by using the equation Q4.

Q1	$F_{zL} = F_{rN} \cdot a_1$
Q2	$F_{zW} = F_W \cdot a_2$
Q3	$F_{Qvorh} = \frac{2 \cdot M_2}{d_0} \cdot f_z$
Q4	$F_{Qvorh} \leq F_{zL}$
	$F_{Qvorh} \leq F_{zW}$

Variable	Unit	Description
a_1		Load action factor - output shaft bearing from table 1
a_2		Load action factor - output shaft from table 1
d_0	[m]	Effective diameter of the transmission element
M_2	[Nm]	Geared motor output torque (from selection tables) or required calculated output torque
F_{zL}	[N]	Permissible overhung load for output shaft bearings
F_{zW}	[N]	Permissible overhung load for output shaft
F_{rN}	[N]	Permissible overhung load from selection tables
F_W	[N]	Permissible overhung load - Output shaft x=l/2 from table 2
F_{Qvorh}	[N]	Existing overhung load at gear shaft
f_z		Factor for transmission element
M_{max}	[Nm]	Highest possible output torque for coupling operation (table 2)

Always use both equations Q1 and Q2 for your calculations.

x / l						
0	0.25	0.5	0.75	1	1.5	2
a_1 → Equation Q1						
1.39	1.18	1.00	0.85	0.73	0.52	0.38
a_2 → Equation Q2						
2.00	2.00	1.00	0.55	0.38	0.23	0.17

Table 1: Load action factors a_1, a_2

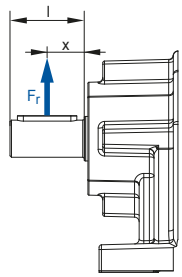

Intermediate values can be interpolated linearly. Combined load ($F_r \neq 0$; $F_a = 0$) on request.

	M_{max} at $F_r = 0$	Output torque M_2 [Nm]												
		50	100	200	300	400	600	820	1550	3000	4500	8000	13000	18000
		F_W [kN] at x/l = 0.5 → Equation Q2												
Ø 20x40	160	3.4	2.8											
Ø 25x50	300	5.9	5.7	4.8										
Ø 30x60	500		7.6	7.1	6.3	5.0								
Ø 35x70	800			11.0	11.0	10.0	8.3							
Ø 40x80	1170				14.0	13.0	12.0	10.7						
Ø 50x100	2250					24.0	24.0	23.0	20.0					
Ø 60x120	3740							31.0	30.0	23.0				
Ø 70x140	5850								44.0	41.0	36.0			
Ø 90x170	11700									72.0	70.0	61.0		
Ø 110x210	20800										106.0	103.0	93.0	
Ø 120x210	26700											129.0	121.0	109.0

Table 2: Permissible overhung load - output shaft x = l/2

In cases where there is no overhung load, the permissible axial load (push or pull) may be determined by taking 50 % of the permissible overhung loads indicated in the selection tables of the respective type of gear. If there are axial loads or radial and axial components acting on the drive which are extraordinarily high, we recommend to contact the manufacturer.

7. Mounting positions, Position of the terminal box and Cable entry

Mounting positions foot type - Sizes C00 to C06

Gear units C00 to C06 are not ventilated and supplied with lifetime lubrication.

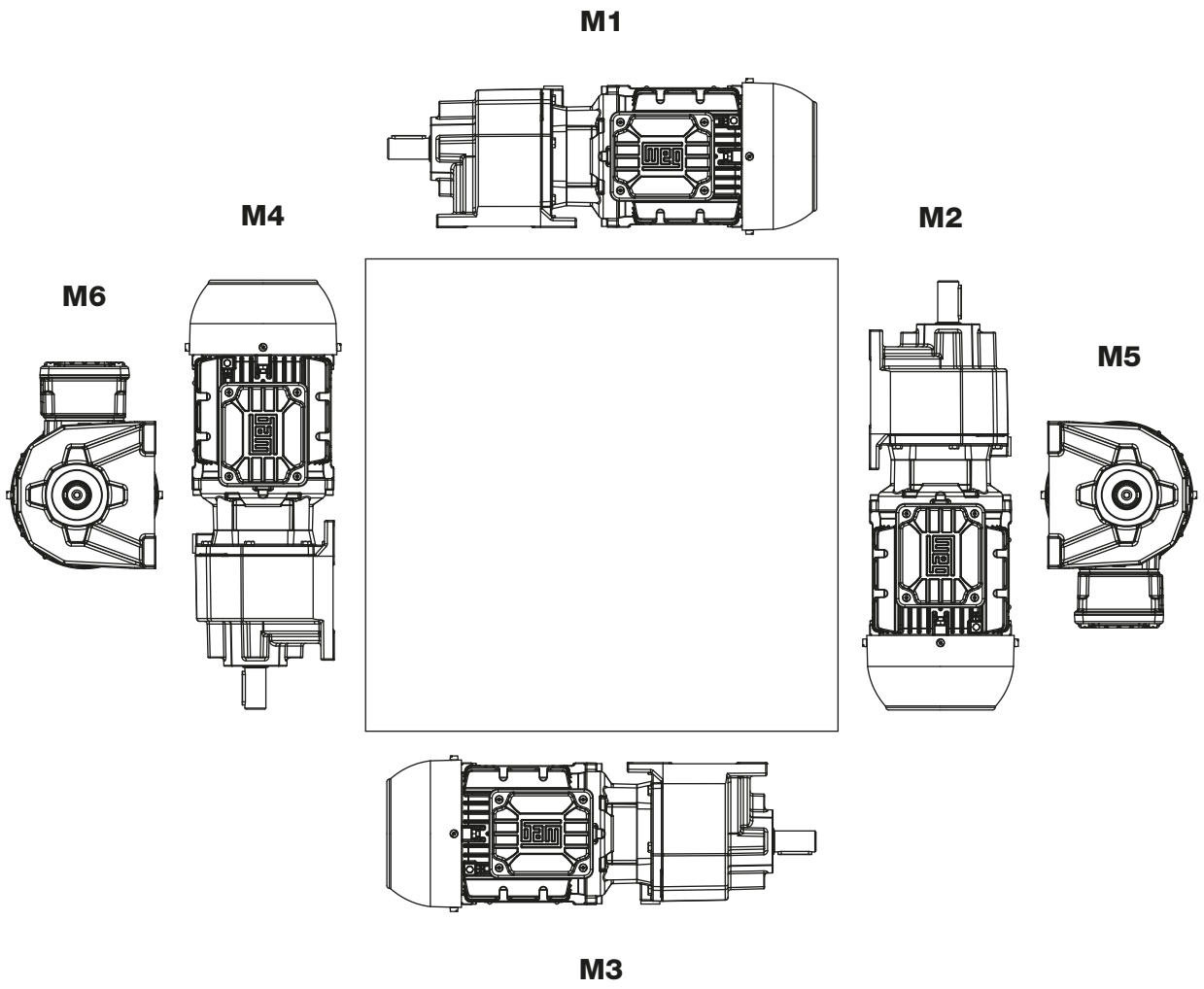

Position of the terminal box
Standard: Position 1

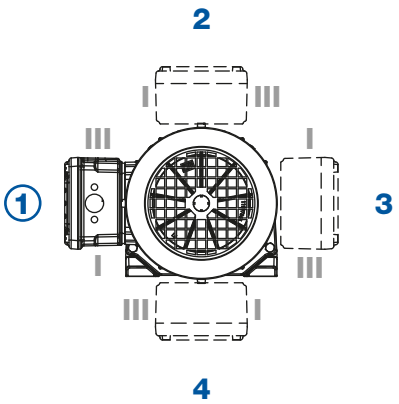

Cable entry
Standard: Position I

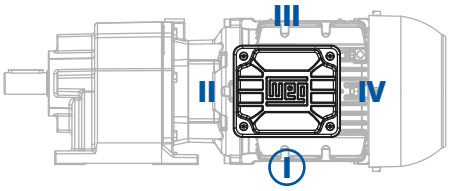

Mounting positions flange type - Sizes C00 to C06

Gear units C00 to C06 are not ventilated and supplied with lifetime lubrication.

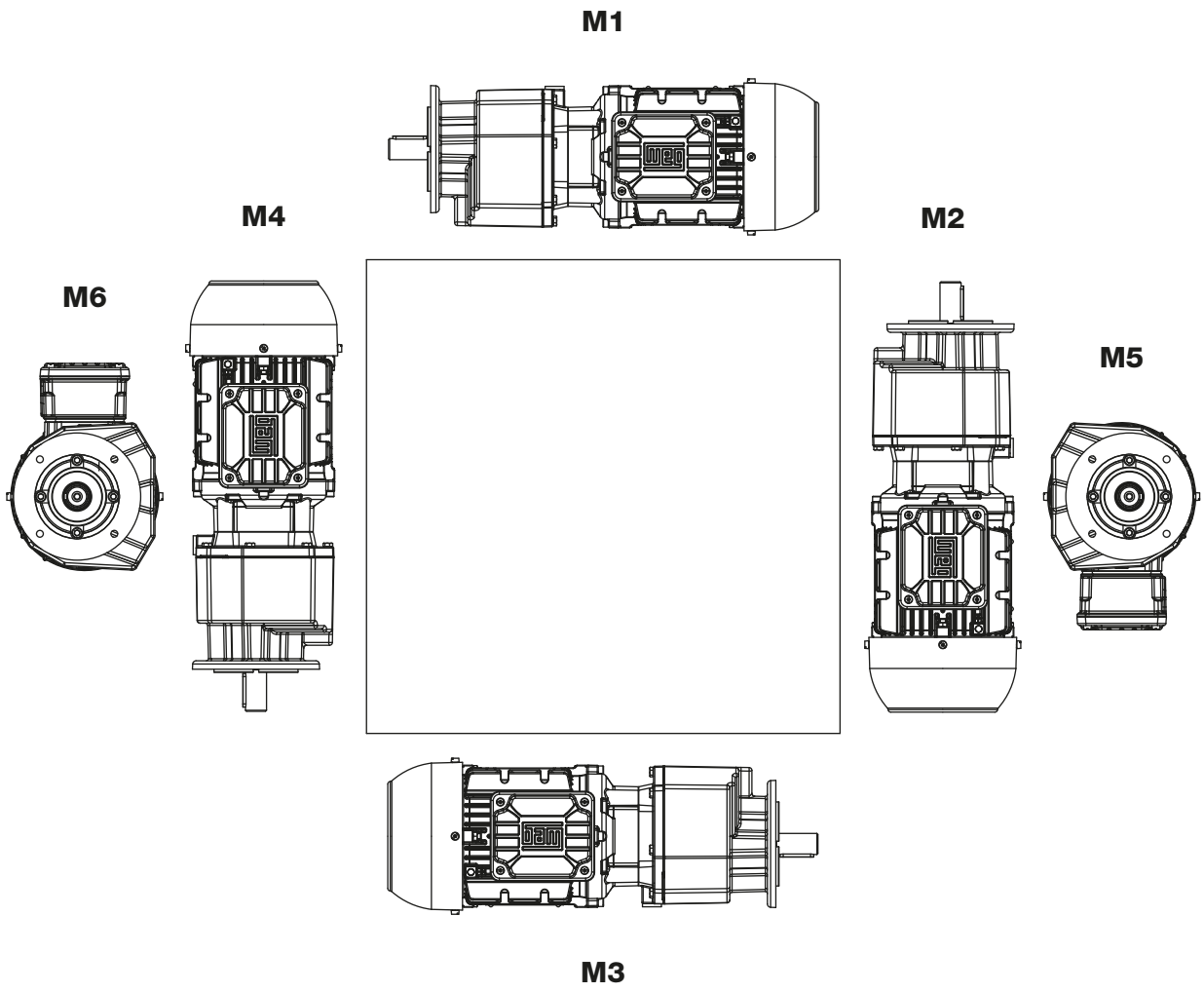

Position of the terminal box

Standard: Position 1

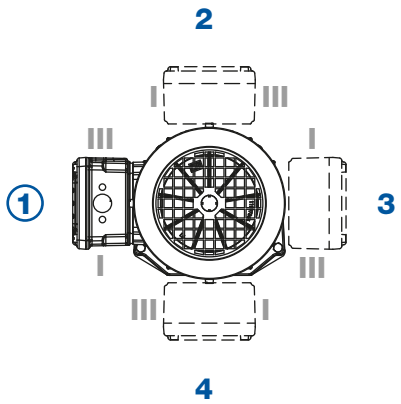

Cable entry

Standard: Position I

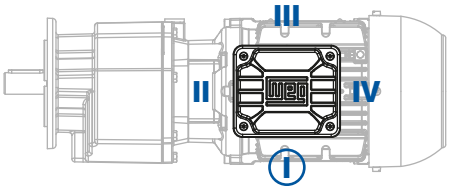

Mounting positions foot type - Sizes C07 to C10

Position of the venting screw

Position of the oil drain screw

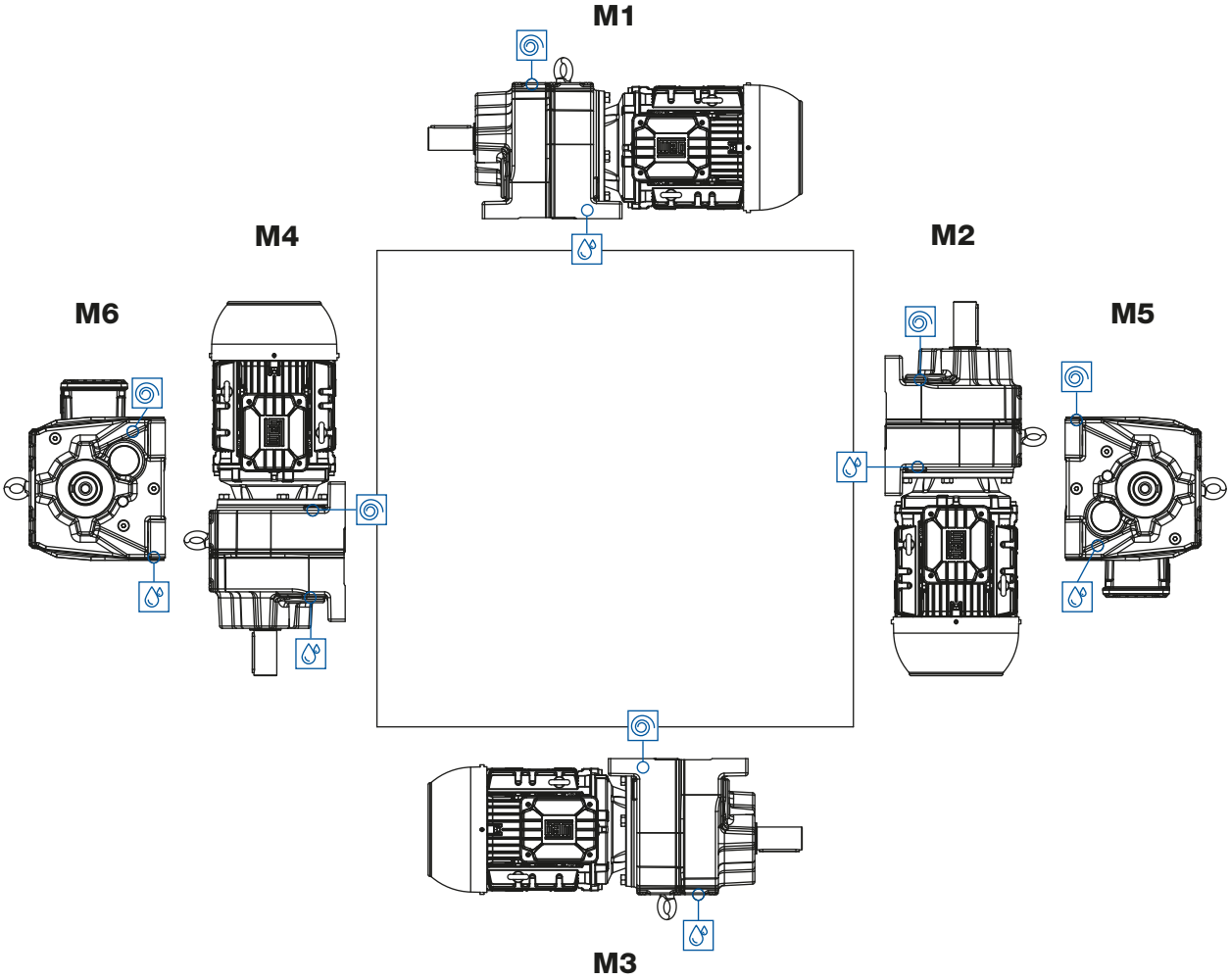

Position of the terminal box
Standard: Position 1

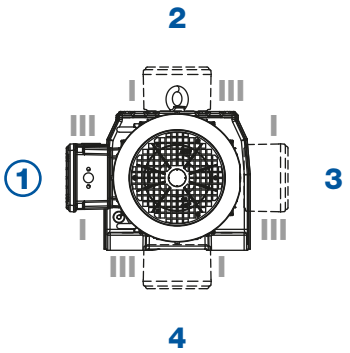

Cable entry
Standard: Position I

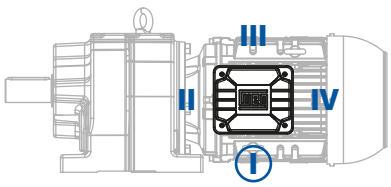

Mounting positions flange type - Sizes C07 to C10

Position of the venting screw

Position of the oil drain screw

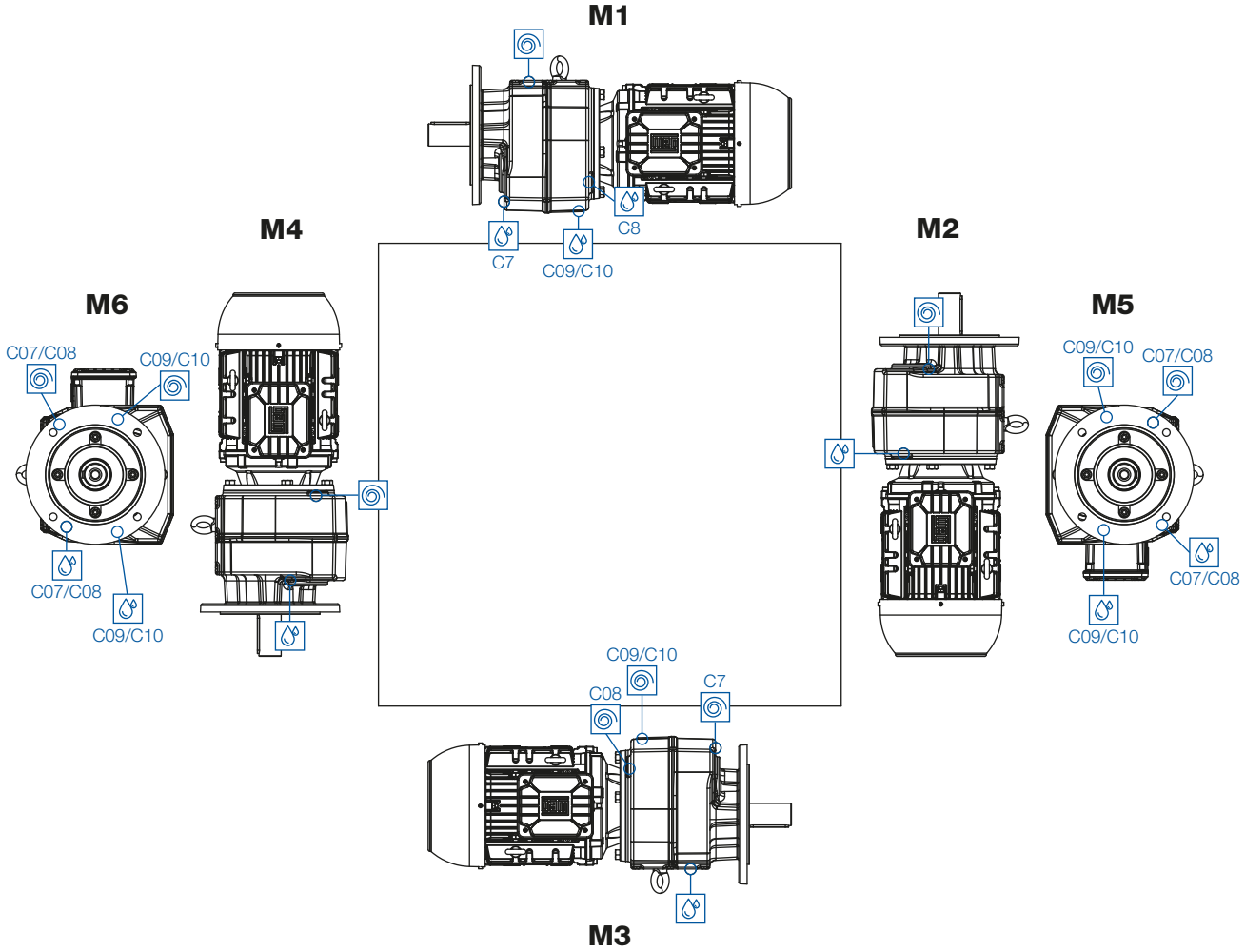

Position of the terminal box

Standard: Position 1

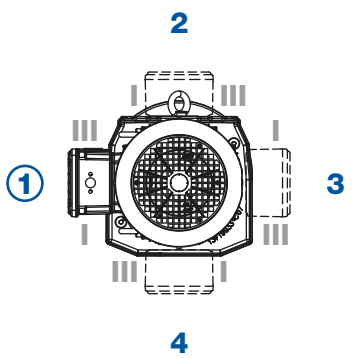

Cable entry

Standard: Position I

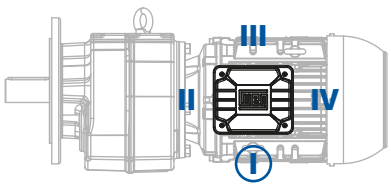

C

Selection tables - Geared motors

The technical data of the geared motors shown in the selection tables apply to an ambient temperature of +20 °C.

The selection tables are calculated with following motor data:

Power (IEC frame size)	Motor series (IE class)
up to 0.55 kW (63 - 80)	11N (IE1) - aluminium
0.75 - 9.2 kW (80 - 132)	11P (IE3) - aluminium
11 - 30 kW (160 - 200)	22P (IE3) - cast iron

Structure of the selection tables

1								2
P_N = 0.12 kW								IE1
50 Hz	60 Hz				at 50 Hz			
0.12 kW	0.14 kW *)							
n_{50}	n_{60}	M_2	f_B	i	F_{rN}		m	Dimension sheet see page
min^{-1}	min^{-1}	Nm			kN		kg	
3	4	5	6	7	8	9	10	11

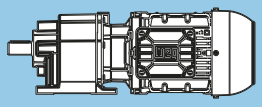

1 Rated power of the motor

2 Given values are based on the respective efficiency class

3 Output speed at 50 Hz

4 Output speed at 60 Hz

5 Output torque

6 Service factor

7 Total ratio

8 Permissible radial load at midpoint of the output shaft extension (standard bearing) at axial load=0

9 Geared motor type

10 Weight

11 Dimension sheet see page

*) Increased rated power at 60 Hz can only be reached together with increased voltage within the wide range (for details see page 254).

Increased rated power
1.2 x P_N

C

P_N = 0.12 kW								IE1
50 Hz 0.12 kW n_{50} min^{-1}	60 Hz 0.14 kW n_{60} min^{-1}	M_2 Nm	f_B	i	at 50 Hz F_{rN} kN	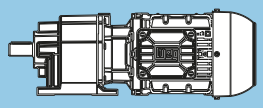	m kg	Dimension sheet see page
2.5	3.1	452	1.85	351.33	13.1	**CG073-11N-63-06F** **CF073-11N-63-06F**	37 41	90
2.8	3.5	412	2.00	319.60	13.3			
3.2	4.0	359	2.30	278.44	13.5			
3.5	4.4	326	2.55	253.30	13.6			
4.1	5.1	278	2.95	216.20	13.7			
3.9	4.8	293	2.85	351.33	13.7	**CG073-11N-63-04E** **CF073-11N-63-04E**	36 40	90
2.4	2.9	484	1.25	375.71	9.4	**CG063-11N-63-06F** **CF063-11N-63-06F**	20 25	88
2.6	3.2	444	1.40	344.51	9.7			
2.9	3.6	396	1.55	307.24	10.1			
3.2	3.9	363	1.70	281.73	10.3			
3.7	4.6	312	1.95	242.60	10.5			
4.0	5.0	286	2.10	222.46	10.6			
4.7	5.9	242	2.50	188.11	10.8			
5.2	6.4	222	2.75	172.49	10.9			
3.7	4.5	313	1.95	375.71	10.5	**CG063-11N-63-04E** **CF063-11N-63-04E**	20 25	88
4.0	4.9	287	2.10	344.51	10.6			
4.5	5.5	256	2.35	307.24	10.8			
4.9	6.0	235	2.60	281.73	10.8			
5.7	7.0	202	3.00	242.60	10.9			
2.7	3.4	423	0.95	328.43	**	**CG053-11N-63-06F** **CF053-11N-63-06F**	16 21	86
3.0	3.7	384	1.05	298.57	5.2			
3.3	4.1	345	1.20	267.93	5.8			
3.7	4.5	314	1.30	243.57	6.2			
4.2	5.2	275	1.50	213.71	6.6			
4.6	5.7	250	1.60	194.29	6.8			
5.4	6.7	213	1.90	165.45	7.0			
5.9	7.3	194	2.10	150.41	7.2			
6.7	8.3	171	2.35	132.97	7.3			
7.4	9.1	156	2.60	120.88	7.4			
4.2	5.2	274	1.50	328.43	6.6	**CG053-11N-63-04E** **CF053-11N-63-04E**	15 20	86
4.6	5.7	249	1.65	298.57	6.8			
5.1	6.3	223	1.80	267.93	7.0			
5.6	7.0	203	2.00	243.57	7.1			
6.4	7.9	178	2.25	213.71	7.3			
7.1	8.7	162	2.50	194.29	7.3			
8.3	10	138	2.95	165.45	7.4			
4.4	5.5	261	0.80	202.55	**	**CG033-11N-63-06F** **CF033-11N-63-06F**	11 13	84
4.9	6.1	233	0.90	180.83	**			
5.4	6.7	211	0.95	164.23	**			
6.2	7.8	183	1.10	142.47	5.0			
6.9	8.5	167	1.25	129.39	5.1			
8.1	10	141	1.45	109.79	5.4			
8.9	11	128	1.60	99.71	5.5			
10	13	110	1.85	85.78	5.6			
11	14	100	2.00	77.90	5.7			
14	17	82	2.45	64.05	5.7			
15	19	75	2.70	58.17	5.8			
4.8	5.9	239	0.85	286.32	**	**CG033-11N-63-04E** **CF033-11N-63-04E**	11 13	84
5.3	6.5	217	0.95	260.03	**			
6.2	7.6	186	1.10	223.03	4.9			
6.8	8.4	169	1.20	202.55	5.1			
7.6	9.4	151	1.35	180.83	5.3			
8.4	10	137	1.50	164.23	5.4			
9.7	12	119	1.70	142.47	5.5			
11	13	108	1.90	129.39	5.6			
13	15	92	2.20	109.79	5.7			
14	17	83	2.45	99.71	5.7			
16	20	71	2.80	85.78	5.8			

Legend see page 25

*** ... on request*

P_N = 0.12 kW								IE1
50 Hz 0.12 kW n_{50} min^{-1}	60 Hz 0.14 kW n_{60} min^{-1}	M_2 Nm	f_B	i	at 50 Hz F_{rN} kN	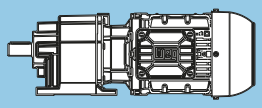	m kg	Dimension sheet see page
13	17	86	1.00	66.50	3.1	**CG012-11N-63-06F** **CF012-11N-63-06F**	8.6 9.9	82
15	19	77	1.15	59.59	3.2			
17	21	67	1.30	51.80	3.3			
19	24	60	1.45	46.42	3.3			
21	26	54	1.60	42.00	3.4			
24	29	48	1.80	37.64	3.4			
27	33	43	2.00	33.09	3.5			
30	37	38	2.25	29.65	3.5			
35	43	33	2.60	25.50	3.5			
36	44	32	1.30	25.05	3.5			
39	48	29	2.90	22.85	3.5			
46	57	25	2.65	19.51	3.6			
21	25	55	1.55	66.50	3.4	**CG012-11N-63-04E** **CF012-11N-63-04E**	7.9 9.2	82
23	28	50	1.75	59.59	3.4			
27	33	43	2.00	51.80	3.5			
30	37	39	2.20	46.42	3.5			
33	40	35	2.45	42.00	3.5			
37	45	31	2.75	37.64	3.5			
55	68	21	2.00	25.05	3.6			
19	23	61	0.85	47.44	**	**CG002-11N-63-06F** **CF002-11N-63-06F**	7.5 8.8	80
21	26	55	0.95	42.34	**			
24	30	47	1.10	36.85	3.7			
27	34	42	1.20	32.89	3.7			
30	38	38	1.35	29.33	3.7			
34	42	34	1.50	26.18	3.7			
39	48	30	1.70	23.00	3.8			
43	54	26	1.90	20.53	3.8			
51	64	22	2.25	17.29	3.8			
53	66	22	1.45	16.86	3.7			
58	72	20	2.55	15.43	3.6			
66	82	17	2.90	13.54	3.5			
68	84	17	2.55	13.10	3.4			
29	36	40	1.30	47.44	3.7	**CG002-11N-63-04E** **CF002-11N-63-04E**	6.8 8.1	80
32	40	35	1.45	42.34	3.7			
37	46	31	1.65	36.85	3.8			
42	52	27	1.85	32.89	3.8			
47	58	24	2.05	29.33	3.8			
53	65	22	2.30	26.18	3.7			
60	74	19	2.65	23.00	3.6			
67	83	17	2.95	20.53	3.5			
80	98	14	3.50	17.29	3.3			
82	101	14	2.25	16.86	3.3			
89	110	13	3.90	15.43	3.2			
102	125	11	4.45	13.54	3.1			
105	129	11	3.95	13.10	3.0			
114	140	10	5.00	12.08	3.0			
132	163	9	5.20	10.42	2.8			
138	170	8	6.05	9.97	2.8			
154	190	7	6.75	8.90	2.7			
168	207	7	6.50	8.17	2.6			
200	246	6	8.75	6.88	2.5			
224	276	5	9.80	6.14	2.4			
286	352	4	9.25	4.81	2.2			
388	479	3	11.55	3.54	2.0			

Legend see page 25

*** ... on request*

C

P_N = 0.18 kW								IE1
50 Hz 0.18 kW n_{50} min^{-1}	60 Hz 0.22 kW n_{60} min^{-1}	M_2 Nm	f_B	i	at 50 Hz F_{rN} kN	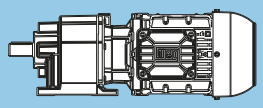	m kg	Dimension sheet see page
2.4	3.0	709	2.20	368.94	23.7	**CG083-11N-71-06E** **CF083-11N-71-06E**	63 67	92
3.1	3.9	547	2.85	284.84	24.0			
2.5	3.1	675	1.25	351.33	11.9	**CG073-11N-71-06E** **CF073-11N-71-06E**	39 43	90
2.8	3.5	614	1.35	319.60	12.3			
3.2	4.0	535	1.55	278.44	12.7			
3.5	4.4	487	1.70	253.30	13.0			
4.1	5.1	415	2.00	216.20	13.3			
4.6	5.6	378	2.20	196.68	13.4			
5.0	6.2	341	2.45	177.39	13.5			
5.5	6.8	310	2.65	161.38	13.6			
3.9	4.8	441	1.90	351.33	13.2	**CG073-11N-63-04F** **CF073-11N-63-04F**	37 41	90
4.3	5.3	401	2.05	319.60	13.3			
4.9	6.1	349	2.35	278.44	13.5			
5.4	6.7	318	2.60	253.30	13.6			
2.4	2.9	722	0.85	375.71	**	**CG063-11N-71-06E** **CF063-11N-71-06E**	23 28	88
2.6	3.2	662	0.95	344.51	**			
2.9	3.6	590	1.05	307.24	8.4			
3.2	3.9	541	1.15	281.73	8.9			
3.7	4.6	466	1.30	242.60	9.6			
4.0	5.0	427	1.45	222.46	9.9			
4.8	5.9	361	1.70	188.11	10.3			
5.2	6.4	331	1.85	172.49	10.4			
5.8	7.2	296	2.05	153.96	10.6			
6.3	7.8	271	2.25	141.17	10.7			
7.6	9.3	228	2.65	118.51	10.9			
8.2	10	209	2.90	108.67	10.9			
3.6	4.5	471	1.30	375.71	9.5	**CG063-11N-63-04F** **CF063-11N-63-04F**	21 26	88
4.0	4.9	432	1.40	344.51	9.8			
4.5	5.5	386	1.60	307.24	10.1			
4.9	6.0	353	1.70	281.73	10.3			
5.6	7.0	304	2.00	242.60	10.6			
6.2	7.6	279	2.15	222.46	10.7			
7.3	9.0	236	2.55	188.11	10.8			
7.9	9.9	216	2.80	172.49	10.9			
3.3	4.1	515	0.80	267.93	**	**CG053-11N-71-06E** **CF053-11N-71-06E**	18 23	86
3.7	4.5	468	0.90	243.57	**			
4.2	5.2	410	1.00	213.71	4.8			
4.6	5.7	373	1.10	194.29	5.4			
5.4	6.7	318	1.30	165.45	6.1			
6.0	7.3	289	1.40	150.41	6.4			
6.7	8.3	255	1.60	132.97	6.7			
7.4	9.1	232	1.75	120.88	6.9			
8.8	11	195	2.10	101.55	7.2			
9.7	12	177	2.30	92.32	7.3			
12	14	149	2.70	77.79	7.4			
13	16	136	2.95	70.71	7.5			
4.2	5.2	412	1.00	328.43	4.7	**CG053-11N-63-04F** **CF053-11N-63-04F**	16 21	86
4.6	5.7	375	1.10	298.57	5.4			
5.1	6.3	336	1.20	267.93	5.9			
5.6	7.0	306	1.35	243.57	6.3			
6.4	8.0	268	1.50	213.71	6.6			
7.1	8.7	244	1.65	194.29	6.8			
8.3	10	208	1.95	165.45	7.1			
9.1	11	189	2.15	150.41	7.2			
10	13	167	2.40	132.97	7.3			
11	14	152	2.65	120.88	7.4			
15	19	113	2.25	58.85	7.5	**CG052-11N-71-06E** **CF052-11N-71-06E**	17 22	86
17	21	103	2.25	53.50	7.6			
25	31	69	2.25	35.67	7.7			

Legend see page 25

*** ... on request*

P_N = 0.18 kW								IE1
50 Hz 0.18 kW n_{50} min^{-1}	60 Hz 0.22 kW n_{60} min^{-1}	M_2 Nm	f_B	i	at 50 Hz F_{rN} kN	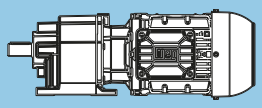	m kg	Dimension sheet see page
6.9	8.5	249	0.85	129.39	**	**CG033-11N-71-06E** **CF033-11N-71-06E**	14 16	84
8.2	10	211	0.95	109.79	**			
9.0	11	192	1.05	99.71	4.9			
10	13	165	1.25	85.78	5.2			
11	14	150	1.35	77.90	5.3			
14	17	123	1.65	64.05	5.5			
15	19	112	1.80	58.17	5.6			
19	23	93	2.20	48.22	5.7			
20	25	84	2.40	43.79	5.7			
25	31	68	2.95	35.38	5.8			
6.8	8.4	254	0.80	202.55	**	**CG033-11N-63-04F** **CF033-11N-63-04F**	12 14	84
7.6	9.4	227	0.90	180.83	**			
8.3	10	206	1.00	164.23	4.7			
9.6	12	179	1.15	142.47	5.0			
11	13	162	1.25	129.39	5.2			
12	15	138	1.50	109.79	5.4			
14	17	125	1.60	99.71	5.5			
16	20	108	1.90	85.78	5.6			
18	22	98	2.05	77.90	5.7			
21	27	80	2.50	64.05	5.8			
24	29	73	2.75	58.17	5.8			
21	26	82	2.25	42.88	5.7	**C0G32-11N-71-06E** **CF032-11N-71-06E**	13 15	84
23	28	75	2.25	38.95	5.8			
26	32	67	3.00	34.88	5.8			
37	46	46	2.25	24.03	5.9			
17	21	99	0.90	51.80	**	**CG012-11N-71-06E** **CF012-11N-71-06E**	11 12	82
19	24	89	1.00	46.42	3.0			
21	26	81	1.10	42.00	3.1			
24	29	72	1.20	37.64	3.2			
27	33	64	1.35	33.09	3.3			
30	37	57	1.50	29.65	3.4			
35	43	49	1.75	25.50	3.4			
36	44	48	0.90	25.05	**			
39	48	44	1.95	22.85	3.5			
45	55	38	2.25	19.92	3.5			
46	57	37	1.80	19.51	3.5			
50	62	34	2.50	17.85	3.5			
57	70	30	2.20	15.82	3.5			
60	74	29	3.00	14.88	3.5			
72	89	24	2.80	12.46	3.5			
21	26	83	1.05	66.50	3.1	**CG012-11N-63-04F** **CF012-11N-63-04F**	9.1 10	82
23	29	75	1.15	59.59	3.2			
26	33	65	1.35	51.80	3.3			
30	37	58	1.50	46.42	3.4			
33	40	53	1.65	42.00	3.4			
36	45	47	1.80	37.64	3.4			
41	51	42	2.05	33.09	3.5			
46	57	37	2.30	29.65	3.5			
54	67	32	2.70	25.50	3.5			
55	68	31	1.35	25.05	3.5			
60	74	29	3.00	22.85	3.5			
70	87	24	2.70	19.51	3.6			

Legend see page 25

*** ... on request*

C

P_N = 0.18 kW								IE1
50 Hz 0.18 kW n_{50} min^{-1}	60 Hz 0.22 kW n_{60} min^{-1}	M_2 Nm	f_B	i	at 50 Hz F_{rN} kN	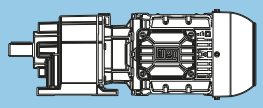	m kg	Dimension sheet see page
27	34	63	0.80	32.89	**	CG002-11N-71-06E CF002-11N-71-06E	10 11	80
31	38	56	0.90	29.33	**			
34	42	50	1.00	26.18	3.6			
39	48	44	1.15	23.00	3.7			
44	54	39	1.30	20.53	3.7			
52	64	33	1.55	17.29	3.7			
53	66	32	1.00	16.86	3.6			
58	72	30	1.70	15.43	3.6			
66	82	26	1.95	13.54	3.4			
68	84	25	1.75	13.10	3.4			
74	91	23	2.20	12.08	3.3			
86	106	20	2.25	10.42	3.1			
90	111	19	2.65	9.97	3.1			
101	124	17	2.95	8.90	3.0			
110	135	16	2.85	8.17	2.9			
29	36	60	0.85	47.44	**	CG002-11N-63-04F CF002-11N-63-04F	8.0 9.3	80
32	40	53	0.95	42.34	**			
37	46	46	1.10	36.85	3.7			
42	52	41	1.25	32.89	3.7			
47	58	37	1.40	29.33	3.7			
52	65	33	1.55	26.18	3.7			
60	74	29	1.75	23.00	3.5			
67	83	26	1.95	20.53	3.4			
79	98	22	2.35	17.29	3.3			
81	101	21	1.50	16.86	3.2			
89	110	19	2.60	15.43	3.1			
101	126	17	2.95	13.54	3.0			
105	130	16	2.65	13.10	3.0			
113	141	15	3.30	12.08	2.9			
131	163	13	3.45	10.42	2.8			
137	171	13	4.00	9.97	2.8			
154	191	11	4.50	8.90	2.7			
168	208	10	4.30	8.17	2.6			
199	247	9.0	5.80	6.88	2.5			
223	277	8.0	6.50	6.14	2.4			
285	353	6.0	6.15	4.81	2.2			
387	480	4.0	7.70	3.54	2.0			

Legend see page 25

*** ... on request*

P_N = 0.25 kW								IE1
50 Hz 0.25 kW n_{50} min^{-1}	60 Hz 0.30 kW n_{60} min^{-1}	M_2 Nm	f_B	i	at 50 Hz F_{rN} kN	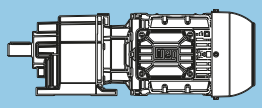	m kg	Dimension sheet see page
2.4	3.0	979	1.60	368.94	22.9	**CG083-11N-71-06F** **CF083-11N-71-06F**	65 69	92
3.2	3.9	756	2.10	284.84	23.6			
3.8	4.6	634	2.45	238.89	23.9			
3.7	4.6	643	2.45	368.94	23.9	**CG083-11N-71-04E** **CF083-11N-71-04E**	62 66	92
2.6	3.2	932	0.90	351.33	**	**CG073-11N-71-06F** **CF073-11N-71-06F**	41 45	90
2.8	3.5	848	1.00	319.60	10.4			
3.2	4.0	739	1.15	278.44	11.4			
3.6	4.4	672	1.25	253.30	11.9			
4.2	5.1	574	1.45	216.20	12.5			
4.6	5.6	522	1.60	196.68	12.8			
5.1	6.3	471	1.75	177.39	13.0			
5.6	6.9	428	1.95	161.38	13.2			
6.6	8.1	364	2.30	137.38	13.4			
7.2	8.9	332	2.50	124.97	13.6			
8.6	11	277	3.00	104.50	13.7			
3.9	4.8	612	1.35	351.33	12.3	**CG073-11N-71-04E** **CF073-11N-71-04E**	38 42	90
4.3	5.3	557	1.50	319.60	12.6			
4.9	6.1	485	1.70	278.44	13.0			
5.4	6.7	441	1.90	253.30	13.2			
6.3	7.9	377	2.20	216.20	13.4			
7.0	8.6	343	2.40	196.68	13.5			
7.7	9.6	309	2.70	177.39	13.6			
8.5	11	281	2.95	161.38	13.7			
3.2	3.9	747	0.85	281.73	**	**CG063-11N-71-06F** **CF063-11N-71-06F**	24 29	88
3.7	4.6	644	0.95	242.60	**			
4.0	5.0	590	1.05	222.46	8.4			
4.8	5.9	499	1.25	188.11	9.3			
5.2	6.4	458	1.35	172.49	9.6			
5.8	7.2	408	1.50	153.96	10.0			
6.4	7.9	374	1.65	141.17	10.2			
7.6	9.4	314	1.95	118.51	10.5			
8.3	10	288	2.10	108.67	10.6			
10	12	238	2.55	89.54	10.8			
11	14	218	2.80	82.10	10.9			
3.6	4.5	655	0.95	375.71	**	**CG063-11N-71-04E** **CF063-11N-71-04E**	21 26	88
4.0	4.9	600	1.00	344.51	8.3			
4.5	5.5	535	1.15	307.24	9.0			
4.9	6.0	491	1.25	281.73	9.4			
5.6	7.0	423	1.45	242.60	9.9			
6.2	7.6	388	1.55	222.46	10.1			
7.3	9.0	328	1.85	188.11	10.5			
7.9	9.9	301	2.00	172.49	10.6			
8.9	11	268	2.25	153.96	10.7			
9.7	12	246	2.45	141.17	10.8			
12	14	207	2.95	118.51	10.9			
15	19	159	2.65	60.00	11.1	**CG062-11N-71-06F** **CF062-11N-71-06F**	24 29	88
16	20	146	2.65	55.02	11.1			
27	33	89	2.65	33.43	11.2			
4.6	5.7	515	0.80	194.29	**	**CG053-11N-71-06F** **CF053-11N-71-06F**	20 25	86
5.4	6.7	439	0.95	165.45	**			
6.0	7.4	399	1.05	150.41	5.0			
6.8	8.3	353	1.15	132.97	5.7			
7.4	9.2	321	1.25	120.88	6.1			
8.9	11	269	1.50	101.55	6.6			
9.7	12	245	1.65	92.32	6.8			
12	14	206	1.95	77.79	7.1			
13	16	188	2.15	70.71	7.2			
15	18	163	2.45	61.63	7.3			
16	20	149	2.70	56.02	7.4			

Legend see page 25

*** ... on request*

C

P_N = 0.25 kW								IE1
50 Hz 0.25 kW n_{50} min^{-1}	60 Hz 0.30 kW n_{60} min^{-1}	M_2 Nm	f_B	i	at 50 Hz F_{rN} kN	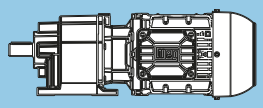	m kg	Dimension sheet see page
4.6	5.7	520	0.80	298.57	**	CG053-11N-71-04E CF053-11N-71-04E	17 22	86
5.1	6.3	467	0.90	267.93	**			
5.6	7.0	424	0.95	243.57	**			
6.4	8.0	372	1.10	213.71	5.4			
7.1	8.7	339	1.20	194.29	5.9			
8.3	10	288	1.40	165.45	6.4			
9.1	11	262	1.55	150.41	6.7			
10	13	232	1.75	132.97	6.9			
11	14	211	1.90	120.88	7.1			
13	17	177	2.30	101.55	7.3			
15	18	161	2.50	92.32	7.3			
18	22	136	3.00	77.79	7.5			
15	19	156	1.65	58.85	7.4	CG052-11N-71-06F CF052-11N-71-06F	19 24	86
17	21	142	1.60	53.50	7.4			
19	23	128	2.65	48.13	7.5			
21	25	116	2.65	43.75	7.5			
25	31	95	1.60	35.67	7.6			
31	38	77	2.65	29.17	7.6			
23	29	103	2.45	58.85	7.6	CG052-11N-71-04E CF052-11N-71-04E	16 21	86
26	32	93	2.45	53.50	7.6			
38	48	62	2.45	35.67	7.7			
9.0	11	265	0.80	99.71	**	CG033-11N-71-06F CF033-11N-71-06F	15 17	84
10	13	228	0.90	85.78	**			
12	14	207	1.00	77.90	4.7			
14	17	170	1.20	64.05	5.1			
15	19	154	1.30	58.17	5.3			
19	23	128	1.60	48.22	5.5			
21	25	116	1.75	43.79	5.6			
25	31	94	2.15	35.38	5.7			
28	35	85	2.35	32.13	5.7			
9.6	12	248	0.85	142.47	**	CG033-11N-71-04E CF033-11N-71-04E	12 14	84
11	13	225	0.90	129.39	**			
12	15	191	1.05	109.79	4.9			
14	17	174	1.20	99.71	5.1			
16	20	149	1.35	85.78	5.3			
18	22	136	1.50	77.90	5.4			
21	27	112	1.80	64.05	5.6			
24	29	101	2.00	58.17	5.6			
28	35	84	2.40	48.22	5.7			
31	39	76	2.65	43.79	5.8			
21	26	114	1.65	42.88	5.6	CG032-11N-71-06F CF032-11N-71-06F	15 17	84
23	28	103	1.65	38.95	5.6			
26	32	93	2.20	34.88	5.7			
28	35	84	2.40	31.67	5.7			
32	40	74	2.75	27.71	5.8			
36	44	67	3.00	25.17	5.8			
37	46	64	1.65	24.03	5.8			
46	57	52	2.50	19.54	5.7			
32	40	75	2.50	42.88	5.8	CG032-11N-71-04E CF032-11N-71-04E	12 14	84
35	44	68	2.50	38.95	5.8			
57	71	42	2.50	24.03	5.3			

Legend see page 25

*** ... on request*

P_N = 0.25 kW								IE1
50 Hz 0.25 kW n_{50} min^{-1}	60 Hz 0.30 kW n_{60} min^{-1}	M_2 Nm	f_B	i	at 50 Hz F_{rN} kN	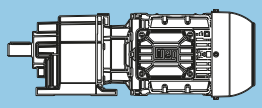	m kg	Dimension sheet see page
21	26	111	0.80	42.00	**	**CG012-11N-71-06F** **CF012-11N-71-06F**	12 13	82
24	29	100	0.90	37.64	**			
27	34	88	1.00	33.09	3.0			
30	37	79	1.10	29.65	3.1			
35	44	68	1.30	25.50	3.3			
39	49	61	1.45	22.85	3.3			
45	56	53	1.65	19.92	3.4			
46	57	52	1.30	19.51	3.4			
50	62	47	1.80	17.85	3.4			
57	70	42	1.60	15.82	3.5			
60	75	39	2.20	14.88	3.5			
68	83	35	2.45	13.33	3.5			
72	89	33	2.00	12.46	3.5			
80	99	30	2.90	11.20	3.4			
94	116	25	2.60	9.60	3.2			
23	29	104	0.85	59.59	**	**CG012-11N-71-04E** **CF012-11N-71-04E**	9.4 11	82
26	33	90	0.95	51.80	**			
30	37	81	1.10	46.42	3.1			
33	40	73	1.20	42.00	3.2			
36	45	66	1.30	37.64	3.3			
41	51	58	1.50	33.09	3.4			
46	57	52	1.65	29.65	3.4			
54	67	44	1.95	25.50	3.5			
55	68	44	0.95	25.05	**			
60	74	40	2.15	22.85	3.5			
69	85	35	2.45	19.92	3.5			
70	87	34	1.95	19.51	3.5			
77	95	31	2.75	17.85	3.4			
87	107	28	2.40	15.82	3.3			
39	48	61	0.85	23.00	**	**CG002-11N-71-06F** **CF002-11N-71-06F**	11 12	80
44	54	54	0.95	20.53	**			
52	64	46	1.10	17.29	3.6			
58	72	41	1.25	15.43	3.5			
66	82	36	1.40	13.54	3.4			
69	85	35	1.25	13.10	3.3			
75	92	32	1.60	12.08	3.2			
86	107	28	1.65	10.42	3.1			
90	111	26	1.90	9.97	3.1			
101	125	24	2.15	8.90	3.0			
110	136	22	2.05	8.17	2.9			
131	161	18	2.75	6.88	2.8			
147	181	16	2.50	6.14	2.6			
187	231	13	2.90	4.81	2.5			
37	46	64	0.80	36.85	**	**CG002-11N-71-04E** **CF002-11N-71-04E**	8.3 9.6	80
42	52	57	0.90	32.89	**			
47	58	51	1.00	29.33	3.6			
52	65	46	1.10	26.18	3.6			
60	74	40	1.25	23.00	3.5			
67	83	36	1.40	20.53	3.4			
79	98	30	1.70	17.29	3.2			
81	101	29	1.10	16.86	3.1			
89	110	27	1.90	15.43	3.1			
101	126	24	2.15	13.54	3.0			
105	130	23	1.90	13.10	2.9			
113	141	21	2.40	12.08	2.9			
131	163	18	2.50	10.42	2.7			
137	171	17	2.90	9.97	2.7			
154	191	16	3.25	8.90	2.6			
168	208	14	3.10	8.17	2.5			
199	247	12	4.20	6.88	2.4			
223	277	11	4.70	6.14	2.3			
285	353	8.0	4.45	4.81	2.2			
387	480	6.0	5.55	3.54	2.0			

Legend see page 25

*** ... on request*

P_N = 0.37 kW								IE1
50 Hz 0.37 kW n_{50} min^{-1}	60 Hz 0.44 kW n_{60} min^{-1}	M_2 Nm	f_B	i	at 50 Hz F_{rN} kN	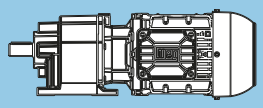	m kg	Dimension sheet see page
3.0	3.7	1178	2.55	306.73	30.7	**CG093-11N-80-06E** **CF093-11N-80-06E**	117 115	94
2.5	3.1	1417	1.10	368.94	21.1			
3.2	4.0	1094	1.45	284.84	22.5			
3.9	4.7	918	1.70	238.89	23.1	**CG083-11N-80-06E** **CF083-11N-80-06E**	64 68	92
4.9	6.0	720	2.20	187.48	23.7			
6.4	7.8	556	2.80	144.69	24.0			
3.7	4.6	955	1.65	368.94	23.0			
4.8	5.9	737	2.15	284.84	23.6	**CG083-11N-71-04F** **CF083-11N-71-04F**	62 66	92
5.7	7.1	618	2.55	238.89	23.9			
3.3	4.1	1069	0.80	278.44	**			
3.6	4.5	973	0.85	253.30	**			
4.3	5.2	830	1.00	216.20	10.6			
4.7	5.7	755	1.10	196.68	11.3			
5.2	6.4	681	1.25	177.39	11.8			
5.7	7.0	620	1.35	161.38	12.2	**CG073-11N-80-06E** **CF073-11N-80-06E**	40 44	90
6.7	8.2	528	1.60	137.38	12.8			
7.4	9.0	480	1.75	124.97	13.0			
8.8	11	401	2.05	104.50	13.3			
9.7	12	365	2.25	95.06	13.4			
11	13	331	2.50	86.17	13.6			
12	14	301	2.75	78.39	13.6			
3.9	4.8	909	0.95	351.33	**			
4.3	5.3	827	1.00	319.60	10.6			
4.9	6.1	721	1.15	278.44	11.5			
5.4	6.7	656	1.30	253.30	12.0			
6.3	7.8	560	1.50	216.20	12.6	**CG073-11N-71-04F** **CF073-11N-71-04F**	38 42	90
6.9	8.6	509	1.65	196.68	12.9			
7.7	9.5	459	1.80	177.39	13.1			
8.5	10	418	2.00	161.38	13.3			
9.9	12	356	2.35	137.38	13.5			
11	13	324	2.55	124.97	13.6			
4.9	6.0	722	0.85	188.11	**			
5.3	6.6	662	0.95	172.49	**			
6.0	7.3	591	1.05	153.96	8.4			
6.5	8.0	542	1.15	141.17	8.9			
7.8	9.5	455	1.35	118.51	9.7			
8.5	10	417	1.45	108.67	9.9	**CG063-11N-80-06E** **CF063-11N-80-06E**	24 29	88
10	13	344	1.75	89.54	10.4			
11	14	315	1.95	82.10	10.5			
13	15	281	2.15	73.28	10.7			
14	17	258	2.35	67.19	10.8			
15	19	228	2.65	59.42	10.9			
17	21	209	2.90	54.49	10.9			
4.4	5.5	795	0.80	307.24	**			
4.8	6.0	729	0.85	281.73	**			
5.6	6.9	628	1.00	242.60	7.9			
6.1	7.6	576	1.05	222.46	8.6			
7.3	9.0	487	1.25	188.11	9.4			
7.9	9.8	447	1.35	172.49	9.7	**CG063-11N-71-04F** **CF063-11N-71-04F**	22 27	88
8.9	11	399	1.55	153.96	10.0			
9.7	12	365	1.65	141.17	10.2			
12	14	307	2.00	118.51	10.6			
13	16	281	2.15	108.67	10.7			
15	19	232	2.60	89.54	10.9			
17	21	213	2.85	82.10	10.9			
15	19	230	1.85	60.00	10.9			
17	21	211	1.85	55.02	10.9	**CG062-11N-80-06E** **CF062-11N-80-06E**	23 28	88
28	34	128	1.85	33.43	11.1			
23	28	155	2.75	60.00	11.1			
25	31	142	2.75	55.02	11.1	**CG062-11N-71-04F** **CF062-11N-71-04F**	22 27	88
41	50	87	2.75	33.43	11.2			

Legend see page 25

*** ... on request*

P_N = 0.37 kW								IE1
50 Hz 0.37 kW n_{50} min^{-1}	60 Hz 0.44 kW n_{60} min^{-1}	M_2 Nm	f_B	i	at 50 Hz F_{rN} kN	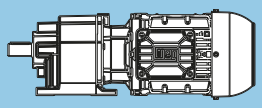	m kg	Dimension sheet see page
6.9	8.5	511	0.80	132.97	**	**CG053-11N-80-06E** **CF053-11N-80-06E**	19 24	86
7.6	9.3	464	0.90	120.88	**			
9.1	11	390	1.05	101.55	5.1			
10	12	355	1.15	92.32	5.7			
12	15	299	1.35	77.79	6.3			
13	16	272	1.50	70.71	6.6			
15	18	237	1.70	61.63	6.9			
16	20	215	1.90	56.02	7.0			
19	23	189	2.15	49.20	7.2			
21	25	172	2.35	44.73	7.3			
7.0	8.7	503	0.80	194.29	**	**CG053-11N-71-04F** **CF053-11N-71-04F**	17 22	86
8.3	10	428	0.95	165.45	**			
9.1	11	389	1.05	150.41	5.1			
10	13	344	1.20	132.97	5.8			
11	14	313	1.30	120.88	6.2			
13	17	263	1.55	101.55	6.7			
15	18	239	1.70	92.32	6.9			
18	22	201	2.00	77.79	7.1			
19	24	183	2.20	70.71	7.2			
22	27	160	2.55	61.63	7.3			
24	30	145	2.80	56.02	7.4			
16	19	226	1.15	58.85	7.0	**CG052-11N-80-06E** **CF052-11N-80-06E**	18 23	86
17	21	205	1.15	53.50	7.1			
19	23	185	1.85	48.13	7.2			
21	26	168	1.85	43.75	7.3			
24	30	146	2.75	38.00	7.4			
26	32	137	1.15	35.67	7.4			
32	39	112	1.85	29.17	7.5			
23	29	152	1.65	58.85	7.4	**CG052-11N-71-04F** **CF052-11N-71-04F**	16 21	86
26	31	138	1.65	53.50	7.4			
28	35	125	2.75	48.13	7.5			
31	39	113	2.75	43.75	7.5			
38	47	92	1.65	35.67	7.6			
47	58	76	2.75	29.17	7.6			
14	18	246	0.85	64.05	**	**CG033-11N-80-06E** **CF033-11N-80-06E**	15 17	84
16	19	223	0.90	58.17	**			
19	23	185	1.10	48.22	4.9			
21	26	168	1.20	43.79	5.1			
26	32	136	1.50	35.38	5.4			
29	35	123	1.65	32.13	5.5			
14	17	258	0.80	99.71	**	**CG033-11N-71-04F** **CF033-11N-71-04F**	13 15	84
16	20	222	0.95	85.78	**			
18	22	202	1.00	77.90	4.7			
21	26	166	1.25	64.05	5.1			
23	29	151	1.35	58.17	5.3			
28	35	125	1.65	48.22	5.5			
31	38	113	1.80	43.79	5.6			
39	48	92	2.20	35.38	5.7			
42	52	83	2.45	32.13	5.7			
21	26	165	1.15	42.88	5.2	**CG032-11N-80-06E** **CF032-11N-80-06E**	14 16	84
24	29	150	1.15	38.95	5.3			
26	32	134	1.50	34.88	5.4			
29	36	122	1.65	31.67	5.5			
33	41	106	1.90	27.71	5.6			
37	45	97	2.10	25.17	5.7			
38	47	92	1.15	24.03	5.7			
43	53	82	2.45	21.40	5.7			
47	58	75	2.70	19.44	5.5			
59	73	60	2.20	15.53	5.2			
77	94	46	2.85	11.99	4.8			

Legend see page 25

*** ... on request*

C

P_N = 0.37 kW								IE1
50 Hz 0.37 kW n_{50} min^{-1}	60 Hz 0.44 kW n_{60} min^{-1}	M_2 Nm	f_B	i	at 50 Hz F_{rN} kN	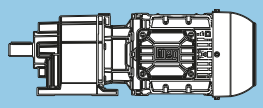	m kg	Dimension sheet see page
32	39	111	1.70	42.88	5.6	**CG032-11N-71-04F** **CF032-11N-71-04F**	12 14	84
35	43	101	1.70	38.95	5.6			
39	48	90	2.25	34.88	5.7			
43	53	82	2.45	31.67	5.7			
49	61	72	2.80	27.71	5.5			
57	70	62	1.70	24.03	5.2			
70	86	51	2.55	19.54	4.9			
36	44	98	0.90	25.50	**	**CG012-11N-80-06E** **CF012-11N-80-06E**	12 13	82
40	49	88	1.00	22.85	3.0			
46	57	77	1.15	19.92	3.2			
47	58	75	0.90	19.51	**			
52	63	69	1.25	17.85	3.3			
58	71	61	1.10	15.82	3.3			
62	76	57	1.50	14.88	3.4			
69	85	51	1.70	13.33	3.4			
74	91	48	1.40	12.46	3.3			
82	101	43	2.00	11.20	3.3			
92	113	39	2.25	10.04	3.2			
96	118	37	1.80	9.60	3.1			
112	137	32	2.70	8.22	3.0			
123	151	29	2.30	7.50	2.9			
33	40	109	0.80	42.00	**	**CG012-11N-71-04F** **CF012-11N-71-04F**	10 11	82
36	45	97	0.90	37.64	**			
41	51	86	1.00	33.09	3.1			
46	57	77	1.15	29.65	3.2			
54	66	66	1.30	25.50	3.3			
60	74	59	1.45	22.85	3.3			
69	85	52	1.65	19.92	3.4			
70	86	51	1.35	19.51	3.4			
76	94	46	1.85	17.85	3.4			
86	107	41	1.65	15.82	3.2			
92	113	39	2.25	14.88	3.2			
102	126	35	2.50	13.33	3.1			
110	135	32	2.05	12.46	3.0			
122	150	29	2.95	11.20	2.9			
142	176	25	2.70	9.60	2.8			
53	65	66	0.80	17.29	**	**CG002-11N-80-06E** **CF002-11N-80-06E**	11 12	80
60	73	59	0.85	15.43	**			
68	83	52	1.00	13.54	3.2			
70	86	50	0.90	13.10	**			
76	94	46	1.10	12.08	3.1			
88	108	40	1.15	10.42	2.9			
92	113	38	1.35	9.97	3.0			
103	127	34	1.50	8.90	2.9			
113	138	31	1.45	8.17	2.8			
134	164	26	1.90	6.88	2.7			
150	184	24	2.15	6.14	2.6			
191	235	18	2.05	4.81	2.4			
260	319	14	2.55	3.54	2.2			

Legend see page 25

*** ... on request*

P_N = 0.37 kW								IE1
50 Hz 0.37 kW n_{50} min^{-1}	60 Hz 0.44 kW n_{60} min^{-1}	M_2 Nm	f_B	i	at 50 Hz F_{rN} kN	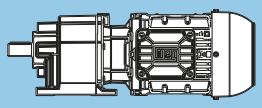	m kg	Dimension sheet see page
59	73	60	0.85	23.00	**	CG002-11N-71-04F CF002-11N-71-04F	9 10	80
66	82	53	0.95	20.53	**			
79	97	45	1.15	17.29	3.1			
88	109	40	1.30	15.43	3.0			
101	124	35	1.45	13.54	2.9			
104	129	34	1.30	13.10	2.8			
113	139	31	1.60	12.08	2.8			
131	162	27	1.70	10.42	2.6			
137	169	26	1.95	9.97	2.7			
153	189	23	2.20	8.90	2.6			
167	206	21	2.10	8.17	2.5			
198	245	18	2.85	6.88	2.4			
222	274	16	3.15	6.14	2.3			
284	350	12	3.00	4.81	2.1			
386	476	9.0	3.75	3.54	1.9			

Legend see page 25

*** ... on request*

C

P_N = 0.55 kW								IE1
50 Hz 0.55 kW n_{50} min^{-1}	60 Hz 0.66 kW n_{60} min^{-1}	M_2 Nm	f_B	i	at 50 Hz F_{rN} kN	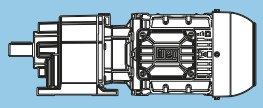	m kg	Dimension sheet see page
3.0	3.7	1732	1.75	306.73	29.2			
3.8	4.7	1371	2.20	242.77	30.2	**CG093-11N-80-06F** **CF093-11N-80-06F**	117 115	94
4.4	5.4	1197	2.55	211.98	30.6			
5.0	6.1	1058	2.85	187.34	30.9			
4.6	5.6	1139	2.65	306.73	30.7	**CG093-11N-80-04E** **CF093-11N-80-04E**	116 114	94
3.3	4.0	1609	1.00	284.84	19.9			
3.9	4.8	1349	1.15	238.89	21.4			
5.0	6.1	1059	1.50	187.48	22.7	**CG083-11N-80-06F** **CF083-11N-80-06F**	64 68	92
6.4	7.9	817	1.90	144.69	23.4			
7.8	9.5	676	2.30	119.68	23.8			
9.1	11	575	2.70	101.80	24.0			
3.8	4.7	1370	1.15	368.94	21.3			
5.0	6.1	1057	1.50	284.84	22.7	**CG083-11N-80-04E** **CF083-11N-80-04E**	64 68	92
5.9	7.2	887	1.75	238.89	23.2			
7.5	9.2	696	2.25	187.48	23.7			
9.8	12	537	2.90	144.69	24.1			
5.2	6.4	1002	0.85	177.39	**			
5.8	7.1	911	0.90	161.38	**			
6.8	8.3	776	1.10	137.38	11.1			
7.4	9.1	706	1.20	124.97	11.7			
8.9	11	590	1.40	104.50	12.4			
9.8	12	537	1.55	95.06	12.7			
11	13	487	1.70	86.17	13.0	**CG073-11N-80-06F** **CF073-11N-80-06F**	40 44	90
12	15	443	1.90	78.39	13.2			
13	16	399	2.10	70.68	13.3			
14	18	363	2.30	64.30	13.5			
15	19	339	2.45	60.06	13.5			
17	21	309	2.70	54.63	13.6			
19	23	279	2.95	49.38	13.7			
5.1	6.2	1034	0.80	278.44	**			
5.6	6.8	940	0.90	253.30	**			
6.5	8.0	803	1.05	216.20	10.9			
7.2	8.8	730	1.15	196.68	11.5			
8.0	9.7	658	1.25	177.39	12.0			
8.8	11	599	1.40	161.38	12.4	**CG073-11N-80-04E** **CF073-11N-80-04E**	40 44	90
10	13	510	1.65	137.38	12.9			
11	14	464	1.80	124.97	13.1			
14	17	388	2.15	104.50	13.4			
15	18	353	2.35	95.06	13.5			
16	20	320	2.60	86.17	13.6			
18	22	291	2.85	78.39	13.7			
6.6	8.1	797	0.80	141.17	**			
7.8	9.6	669	0.90	118.51	**			
8.6	10	614	1.00	108.67	8.1			
10	13	506	1.20	89.54	9.2			
11	14	464	1.30	82.10	9.6			
13	16	414	1.45	73.28	9.9			
14	17	379	1.60	67.19	10.2	**CG063-11N-80-06F** **CF063-11N-80-06F**	24 29	88
16	19	336	1.80	59.42	10.4			
17	21	308	1.95	54.49	10.5			
19	23	281	2.15	49.74	10.7			
20	25	258	2.35	45.61	10.8			
23	28	228	2.65	40.32	10.9			
25	31	209	2.90	36.97	10.9			

Legend see page 25

*** ... on request*

P_N = 0.55 kW								IE1
50 Hz 0.55 kW n_{50} min^{-1}	60 Hz 0.66 kW n_{60} min^{-1}	M_2 Nm	f_B	i	at 50 Hz F_{rN} kN	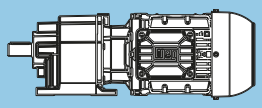	m kg	Dimension sheet see page
7.5	9.2	698	0.90	188.11	**	**CG063-11N-80-04E** **CF063-11N-80-04E**	23 28	88
8.2	10	640	0.95	172.49	**			
9.2	11	572	1.05	153.96	8.6			
10	12	524	1.15	141.17	9.1			
12	15	440	1.40	118.51	9.8			
13	16	403	1.50	108.67	10.0			
16	19	332	1.85	89.54	10.4			
17	21	305	2.00	82.10	10.6			
19	24	272	2.25	73.28	10.7			
21	26	249	2.45	67.19	10.8			
24	29	221	2.75	59.42	10.9			
26	32	202	3.00	54.49	10.9			
16	19	339	1.25	60.00	10.4	**CG062-11N-80-06F** **CF062-11N-80-06F**	24 29	88
17	21	311	1.25	55.02	10.5			
20	24	269	2.25	47.55	10.7			
21	26	246	2.30	43.60	10.8			
25	31	209	2.90	36.92	10.9			
28	34	189	1.25	33.43	11.0			
35	43	150	2.30	26.49	11.1			
24	29	223	1.90	60.00	10.9	**CG062-11N-80-04E** **CF062-11N-80-04E**	23 28	88
26	31	204	1.90	55.02	10.9			
42	52	124	1.90	33.43	11.1			
10	12	521	0.80	92.32	**	**CG053-11N-80-06F** **CF053-11N-80-06F**	19 24	86
12	15	439	0.95	77.79	**			
13	16	399	1.05	70.71	5.0			
15	18	348	1.15	61.63	5.8			
17	20	316	1.30	56.02	6.1			
19	23	278	1.45	49.20	6.5			
21	25	253	1.60	44.73	6.8			
11	13	494	0.85	132.97	**	**CG053-11N-80-04E** **CF053-11N-80-04E**	19 24	86
12	14	449	0.90	120.88	**			
14	17	377	1.10	101.55	5.3			
15	19	343	1.20	92.32	5.8			
18	22	289	1.40	77.79	6.4			
20	24	262	1.55	70.71	6.7			
23	28	229	1.75	61.63	6.9			
25	31	208	1.95	56.02	7.1			
29	35	183	2.20	49.20	7.2			
32	39	166	2.45	44.73	7.3			
16	19	332	0.80	58.85	**	**CG052-11N-80-06F** **CF052-11N-80-06F**	18 23	86
17	21	302	0.80	53.50	**			
19	24	272	1.25	48.13	6.6			
21	26	247	1.25	43.75	6.8			
24	30	215	1.90	38.00	7.0			
27	33	195	2.05	34.55	7.2			
32	39	166	2.45	29.46	7.3			
35	43	151	2.65	26.79	7.4			
39	47	136	2.95	24.12	7.5			
40	50	130	2.10	23.03	7.5			
52	64	101	2.65	17.86	7.6			
24	29	218	1.15	58.85	7.0	**CG052-11N-80-04E** **CF052-11N-80-04E**	18 23	86
26	32	199	1.15	53.50	7.1			
29	36	179	1.90	48.13	7.3			
32	39	162	1.90	43.75	7.3			
37	45	141	2.85	38.00	7.4			
40	48	132	1.15	35.67	7.5			
49	59	108	1.90	29.17	7.6			
21	26	247	0.85	43.79	**	**CG033-11N-80-06F** **CF033-11N-80-06F**	15 17	84
26	32	200	1.05	35.38	4.7			
29	35	181	1.15	32.13	5.0			

Legend see page 25

*** ... on request*

P_N = 0.55 kW								IE1
50 Hz 0.55 kW n_{50} min^{-1}	60 Hz 0.66 kW n_{60} min^{-1}	M_2 Nm	f_B	i	at 50 Hz F_{rN} kN	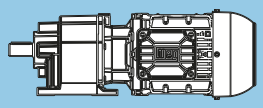	m kg	Dimension sheet see page
22	27	238	0.85	64.05	**	**CG033-11N-80-04E** **CF033-11N-80-04E**	14 16	84
24	30	216	0.95	58.17	**			
29	36	179	1.15	48.22	5.0			
32	39	163	1.25	43.79	5.2			
40	49	131	1.55	35.38	5.4			
44	54	119	1.70	32.13	5.4			
22	27	242	0.80	42.88	**	**CG032-11N-80-06F** **CF032-11N-80-06F**	14 16	84
24	29	220	0.80	38.95	**			
27	33	197	1.05	34.88	4.8			
29	36	179	1.15	31.67	5.0			
34	41	157	1.30	27.71	5.2			
37	45	142	1.45	25.17	5.4			
39	47	136	0.80	24.03	**			
43	53	121	1.70	21.40	5.5			
48	59	110	1.85	19.44	5.3			
54	67	97	2.10	17.09	5.2			
60	73	88	2.30	15.52	5.0			
72	88	73	2.75	12.92	4.8			
78	95	68	1.95	11.99	4.6			
97	119	54	2.45	9.57	4.3			
33	40	159	1.20	42.88	5.2	**CG032-11N-80-04E** **CF032-11N-80-04E**	14 16	84
36	44	145	1.20	38.95	5.3			
41	49	129	1.55	34.88	5.5			
45	54	118	1.75	31.67	5.4			
51	62	103	1.95	27.71	5.2			
56	69	93	2.15	25.17	5.1			
59	72	89	1.20	24.03	5.0			
66	81	79	2.55	21.40	4.9			
72	88	73	1.80	19.54	4.7			
73	89	72	2.80	19.44	4.7			
91	111	58	2.30	15.53	4.4			
118	144	45	2.95	11.99	4.1			
47	57	113	0.80	19.92	**	**CG012-11N-80-06F** **CF012-11N-80-06F**	12 13	82
52	64	101	0.85	17.85	**			
63	77	84	1.05	14.88	3.1			
70	86	75	1.15	13.33	3.2			
75	91	70	0.95	12.46	**			
83	102	63	1.35	11.20	3.2			
93	114	57	1.50	10.04	3.1			
97	119	54	1.25	9.60	3.0			
113	139	46	1.85	8.22	2.9			
124	152	42	1.60	7.50	2.8			
126	155	42	2.05	7.36	2.8			
166	204	32	2.10	5.60	2.6			
220	270	24	2.80	4.22	2.4			
48	58	110	0.80	29.65	**	**CG012-11N-80-04E** **CF012-11N-80-04E**	12 13	82
55	68	95	0.90	25.50	**			
62	75	85	1.05	22.85	3.1			
71	87	74	1.15	19.92	3.2			
73	88	72	0.95	19.51	**			
79	97	66	1.30	17.85	3.2			
89	109	59	1.15	15.82	3.0			
95	116	55	1.55	14.88	3.1			
106	129	49	1.75	13.33	3.0			
114	138	46	1.45	12.46	2.9			
126	154	42	2.05	11.20	2.8			
141	172	37	2.30	10.04	2.7			
147	180	36	1.90	9.60	2.7			
172	210	31	2.80	8.22	2.6			
189	230	28	2.40	7.50	2.5			

Legend see page 25

*** ... on request*

P_N = 0.55 kW								IE1
50 Hz 0.55 kW n_{50} min^{-1}	60 Hz 0.66 kW n_{60} min^{-1}	M_2 Nm	f_B	i	at 50 Hz F_{rN} kN	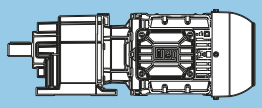	m kg	Dimension sheet see page
89	109	59	0.80	10.42	**	CG002-11N-80-06F CF002-11N-80-06F	11 12	80
93	114	56	0.90	9.97	**			
104	128	50	1.00	8.90	2.8			
114	140	46	1.00	8.17	2.6			
135	166	39	1.30	6.88	2.6			
151	186	35	1.45	6.14	2.5			
193	237	27	1.40	4.81	2.3			
263	322	20	1.75	3.54	2.1			
381	467	14	2.20	2.44	1.9			
82	100	64	0.80	17.29	**	CG002-11N-80-04E CF002-11N-80-04E	11 12	80
92	112	57	0.90	15.43	**			
105	127	50	1.00	13.54	2.8			
108	132	49	0.90	13.10	**			
117	143	45	1.15	12.08	2.7			
136	166	39	1.20	10.42	2.5			
142	173	37	1.40	9.97	2.5			
159	194	33	1.55	8.90	2.5			
173	211	30	1.50	8.17	2.4			
206	251	26	2.00	6.88	2.3			
230	281	23	2.20	6.14	2.2			
294	359	18	2.10	4.81	2.0			
400	487	13	2.60	3.54	1.9			

Legend see page 25

*** ... on request*

P_N = 0.75 kW								IE3
50 Hz 0.75 kW n_{50} min^{-1}	60 Hz 0.90 kW n_{60} min^{-1}	M_2 Nm	f_B	i	at 50 Hz F_{rN} kN	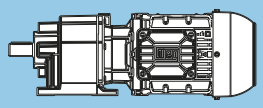	m kg	Dimension sheet see page
3.8	4.6	1878	2.40	246.43	44.0	**CG103-11P-90S/L-06E** **CF103-11P-90S/L-06E**	170 174	96
4.5	5.5	1587	2.85	208.33	44.4			
3.1	3.7	2337	1.30	306.73	26.8	**CG093-11P-90S/L-06E** **CF093-11P-90S/L-06E**	127 125	94
3.9	4.7	1850	1.65	242.77	28.8			
4.4	5.4	1615	1.90	211.98	29.5			
5.0	6.1	1427	2.15	187.34	30.1			
5.9	7.2	1207	2.50	158.42	30.6			
6.1	7.4	1175	2.60	154.24	30.7			
6.9	8.4	1038	2.90	136.18	30.9			
4.6	5.6	1547	1.95	306.73	29.7	**CG093-11P-80-04F** **CF093-11P-80-04F**	118 116	94
5.8	7.1	1225	2.45	242.77	30.6			
6.7	8.1	1069	2.85	211.98	30.9			
3.9	4.8	1820	0.90	238.89	**	**CG083-11P-90S/L-06E** **CF083-11P-90S/L-06E**	75 79	92
5.0	6.1	1429	1.10	187.48	21.0			
6.5	7.9	1102	1.45	144.69	22.5			
7.9	9.6	912	1.70	119.68	23.2			
9.2	11	776	2.00	101.80	23.5			
11	13	672	2.35	88.23	23.8			
13	15	568	2.75	74.50	24.0			
3.8	4.7	1861	0.85	368.94	**	**CG083-11P-80-04F** **CF083-11P-80-04F**	66 70	92
5.0	6.0	1437	1.10	284.84	21.0			
5.9	7.2	1205	1.30	238.89	22.1			
7.6	9.2	946	1.65	187.48	23.0			
9.8	12	730	2.15	144.69	23.7			
12	14	604	2.60	119.68	23.9			
6.8	8.3	1047	0.80	137.38	**	**CG073-11P-90S/L-06E** **CF073-11P-90S/L-06E**	51 55	90
7.5	9.2	952	0.90	124.97	**			
9.0	11	796	1.05	104.50	10.9			
9.9	12	724	1.15	95.06	11.5			
11	13	657	1.25	86.17	12.0			
12	15	597	1.40	78.39	12.4			
13	16	539	1.55	70.68	12.7			
15	18	490	1.70	64.30	12.9			
16	19	458	1.80	60.06	13.1			
17	21	416	2.00	54.63	13.3			
19	23	376	2.20	49.38	13.4			
21	25	342	2.35	44.92	13.5			
24	29	298	2.60	39.17	13.6			
26	32	271	2.70	35.63	13.7			
6.6	8.0	1091	0.80	216.20	**	**CG073-11P-80-04F** **CF073-11P-80-04F**	42 46	90
7.2	8.7	992	0.85	196.68	**			
8.0	9.7	895	0.95	177.39	**			
8.8	11	814	1.05	161.38	10.8			
10	13	693	1.20	137.38	11.8			
11	14	630	1.35	124.97	12.2			
14	16	527	1.60	104.50	12.8			
15	18	479	1.75	95.06	13.0			
16	20	435	1.90	86.17	13.2			
18	22	395	2.10	78.39	13.3			
20	24	357	2.35	70.68	13.5			
22	27	324	2.55	64.30	13.6			
24	29	303	2.75	60.06	13.6			
26	31	276	3.00	54.63	13.7			
24	29	297	2.80	38.92	13.7	**CG072-11P-90S/L-06E** **CF072-11P-90S/L-06E**	50 54	90

Legend see page 25

*** ... on request*

P_N = 0.75 kW								IE3
50 Hz 0.75 kW n_{50} min^{-1}	60 Hz 0.90 kW n_{60} min^{-1}	M_2 Nm	f_B	i	at 50 Hz F_{rN} kN	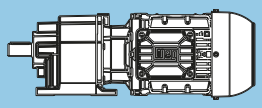	m kg	Dimension sheet see page
10	13	682	0.90	89.54	**	**CG063-11P-90S/L-06E** **CF063-11P-90S/L-06E**	34 39	88
11	14	626	1.00	82.10	8.0			
13	16	558	1.10	73.28	8.7			
14	17	512	1.20	67.19	9.2			
16	19	453	1.35	59.42	9.7			
17	21	415	1.45	54.49	9.9			
19	23	379	1.60	49.74	10.2			
21	25	348	1.75	45.61	10.3			
23	28	307	2.00	40.32	10.6			
25	31	282	2.15	36.97	10.7			
9.2	11	777	0.80	153.96	**	**CG063-11P-80-04F** **CF063-11P-80-04F**	25 30	88
10	12	712	0.85	141.17	**			
12	15	598	1.05	118.51	8.3			
13	16	548	1.10	108.67	8.8			
16	19	452	1.35	89.54	9.7			
17	21	414	1.45	82.10	9.9			
19	23	370	1.65	73.28	10.2			
21	26	339	1.80	67.19	10.4			
24	29	300	2.05	59.42	10.6			
26	32	275	2.20	54.49	10.7			
29	35	251	2.40	49.74	10.8			
31	38	230	2.65	45.61	10.9			
35	43	203	3.00	40.32	10.9			
16	19	457	0.95	60.00	**	**CG062-11P-90S/L-06E** **CF062-11P-90S/L-06E**	34 39	88
17	21	419	0.95	55.02	**			
20	24	362	1.70	47.55	10.3			
22	26	332	1.70	43.60	10.4			
25	31	281	2.15	36.92	10.7			
28	34	258	2.35	33.86	10.8			
31	38	231	2.60	30.30	10.9			
34	41	212	2.85	27.78	10.9			
35	43	202	1.70	26.49	11.0			
46	56	157	2.45	20.57	11.1			
56	68	129	2.95	16.88	10.7			
24	29	303	1.40	60.00	10.6	**CG062-11P-80-04F** **CF062-11P-80-04F**	25 30	88
26	31	278	1.40	55.02	10.7			
30	36	240	2.55	47.55	10.8			
33	39	220	2.60	43.60	10.9			
42	51	169	1.40	33.43	11.0			
54	65	134	2.60	26.49	10.8			
15	19	470	0.90	61.63	**	**CG053-11P-90S/L-06E** **CF053-11P-90S/L-06E**	30 35	86
17	20	427	0.95	56.02	**			
19	23	375	1.10	49.20	5.4			
21	26	341	1.20	44.73	5.8			
14	17	512	0.80	101.55	**	**CG053-11P-80-04F** **CF053-11P-80-04F**	21 26	86
15	19	466	0.90	92.32	**			
18	22	392	1.05	77.79	5.1			
20	24	357	1.15	70.71	5.6			
23	28	311	1.30	61.63	6.2			
25	31	283	1.45	56.02	6.5			
29	35	248	1.65	49.20	6.8			
32	38	226	1.80	44.73	7.0			

Legend see page 25

*** ... on request*

C

P_N = 0.75 kW								IE3
50 Hz 0.75 kW n_{50} min^{-1}	60 Hz 0.90 kW n_{60} min^{-1}	M_2 Nm	f_B	i	at 50 Hz F_{rN} kN	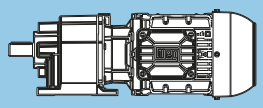	m kg	Dimension sheet see page
20	24	367	0.95	48.13	**	CG052-11P-90S/L-06E CF052-11P-90S/L-06E	29 34	86
21	26	333	0.95	43.75	**			
25	30	290	1.40	38.00	6.4			
27	33	263	1.55	34.55	6.7			
32	39	224	1.80	29.46	7.0			
35	43	204	2.00	26.79	7.1			
39	47	184	2.20	24.12	7.2			
41	50	175	1.55	23.03	7.3			
43	52	167	2.40	21.92	7.3			
51	62	141	2.85	18.56	7.4			
53	64	136	2.00	17.86	7.5			
64	78	111	2.40	14.62	7.5			
24	29	297	0.85	58.85	**	CG052-11P-80-04F CF052-11P-80-04F	20 25	86
27	32	270	0.85	53.50	**			
30	36	243	1.40	48.13	6.8			
32	39	221	1.40	43.75	7.0			
37	45	192	2.10	38.00	7.2			
40	48	180	0.85	35.67	**			
41	50	174	2.30	34.55	7.3			
48	58	149	2.70	29.46	7.4			
49	59	147	1.40	29.17	7.4			
53	64	135	3.00	26.79	7.5			
62	75	116	2.30	23.03	7.5			
80	96	90	3.00	17.86	7.5			
29	36	243	0.85	48.22	**	CG033-11P-80-04F CF033-11P-80-04F	16 18	84
32	39	221	0.95	43.79	**			
40	49	178	1.15	35.38	5.0			
44	54	162	1.25	32.13	5.2			
27	33	266	0.80	34.88	**	CG032-11P-90S/L-06E CF032-11P-90S/L-06E	25 27	84
30	36	241	0.85	31.67	**			
34	41	211	0.95	27.71	**			
37	45	192	1.05	25.17	4.9			
44	54	163	1.25	21.40	5.2			
48	59	148	1.40	19.44	5.1			
55	67	130	1.55	17.09	4.9			
61	74	118	1.70	15.52	4.8			
73	89	98	2.05	12.92	4.6			
78	95	91	1.45	11.99	4.5			
80	98	89	2.25	11.73	4.5			
96	117	75	2.70	9.82	4.3			
98	120	73	1.80	9.57	4.2			
105	128	68	2.95	8.92	4.2			
130	158	55	2.40	7.24	3.9			
33	40	216	0.90	42.88	**	CG032-11P-80-04F CF032-11P-80-04F	16 18	84
36	44	196	0.90	38.95	**			
41	49	176	1.15	34.88	5.0			
45	54	160	1.30	31.67	5.1			
51	62	140	1.45	27.71	5.0			
56	68	127	1.60	25.17	4.9			
59	72	121	0.85	24.03	**			
66	80	108	1.90	21.40	4.7			
73	88	98	2.05	19.44	4.6			
83	101	86	2.35	17.09	4.4			
91	111	78	2.60	15.52	4.3			
118	143	60	2.15	11.99	4.0			
148	180	48	2.70	9.57	3.8			

Legend see page 25

*** ... on request*

P_N = 0.75 kW								IE3
50 Hz 0.75 kW n_{50} min^{-1}	60 Hz 0.90 kW n_{60} min^{-1}	M_2 Nm	f_B	i	at 50 Hz F_{rN} kN	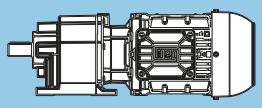	m kg	Dimension sheet see page
71	86	102	0.85	13.33	**	**CG012-11P-90S/L-06E** **CF012-11P-90S/L-06E**	22 23	82
84	102	85	1.00	11.20	3.0			
94	114	77	1.15	10.04	2.9			
98	119	73	0.95	9.60	**			
114	139	63	1.40	8.22	2.8			
125	153	57	1.20	7.50	2.7			
128	156	56	1.55	7.36	2.7			
168	204	43	1.55	5.60	2.5			
223	271	32	2.10	4.22	2.3			
304	371	24	2.85	3.09	2.1			
71	86	100	0.85	19.92	**	**CG012-11P-80-04F** **CF012-11P-80-04F**	13 14	82
80	96	90	0.95	17.85	**			
90	109	80	0.85	15.82	**			
95	116	75	1.15	14.88	2.9			
107	129	67	1.30	13.33	2.8			
114	138	63	1.10	12.46	2.7			
127	154	56	1.55	11.20	2.7			
141	171	51	1.70	10.04	2.7			
148	179	48	1.40	9.60	2.6			
173	209	41	2.10	8.22	2.5			
189	229	38	1.75	7.50	2.4			
193	234	37	2.30	7.36	2.4			
254	307	28	2.35	5.60	2.2			
118	142	61	0.85	12.08	**	**CG002-11P-80-04F** **CF002-11P-80-04F**	12 13	80
136	165	53	0.90	10.42	**			
142	173	50	1.00	9.97	2.5			
160	193	45	1.15	8.90	2.4			
174	211	41	1.10	8.17	2.3			
206	250	35	1.45	6.88	2.2			
231	280	31	1.65	6.14	2.2			
295	358	24	1.55	4.81	2.0			
401	486	18	1.95	3.54	1.8			

Legend see page 25

*** ... on request*

C

P_N = 1.1 kW								IE3
50 Hz 1.1 kW n_{50} min^{-1}	60 Hz 1.3 kW n_{60} min^{-1}	M_2 Nm	f_B	i	at 50 Hz F_{rN} kN	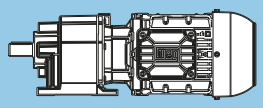	m kg	Dimension sheet see page
5.9	7.1	1779	2.55	246.43	44.1	**CG103-11P-90S/L-04E** **CF103-11P-90S/L-04E**	167 171	96
7.0	8.4	1504	3.00	208.33	44.5			
3.8	4.7	2739	1.65	246.43	42.1	**CG103-11P-100L-06D** **CF103-11P-100L-06D**	178 182	96
4.5	5.5	2316	1.95	208.33	43.1			
5.2	6.4	2005	2.25	180.35	43.7			
5.9	7.2	1776	2.55	159.72	44.1			
6.8	8.3	1536	2.95	138.17	44.5			
4.7	5.7	2215	1.40	306.73	27.3	**CG093-11P-90S/L-04E** **CF093-11P-90S/L-04E**	125 123	94
6.0	7.2	1753	1.75	242.77	29.1			
6.9	8.3	1530	2.00	211.98	29.8			
7.8	9.4	1353	2.25	187.34	30.3			
9.2	11	1144	2.65	158.42	30.7			
9.4	11	1114	2.70	154.24	30.8			
3.1	3.7	3410	0.90	306.73	**	**CG093-11P-100L-06D** **CF093-11P-100L-06D**	136 134	94
3.9	4.7	2699	1.15	242.77	24.9			
4.5	5.4	2356	1.30	211.98	26.7			
5.0	6.1	2083	1.45	187.34	27.9			
6.0	7.3	1761	1.75	158.42	29.1			
6.1	7.5	1715	1.75	154.24	29.2			
6.9	8.4	1514	2.00	136.18	29.8			
7.7	9.4	1357	2.25	122.08	30.2			
7.9	9.7	1322	2.30	118.88	30.3			
8.9	11	1185	2.55	106.60	30.6			
9.3	11	1132	2.65	101.85	30.7			
10	12	1047	2.90	94.21	30.9			
5.1	6.2	2057	0.80	284.84	**	**CG083-11P-90S/L-04E** **CF083-11P-90S/L-04E**	72 76	92
6.1	7.4	1725	0.90	238.89	**			
7.8	9.4	1354	1.15	187.48	21.4			
10	12	1045	1.50	144.69	22.7			
12	15	864	1.80	119.68	23.3			
14	17	735	2.15	101.80	23.6			
16	20	637	2.45	88.23	23.9			
20	24	538	2.90	74.50	24.1			
6.5	7.9	1608	1.00	144.69	20.0	**CG083-11P-100L-06D** **CF083-11P-100L-06D**	83 87	92
7.9	9.6	1330	1.20	119.68	21.5			
9.3	11	1132	1.40	101.80	22.4			
11	13	981	1.60	88.23	22.9			
13	15	828	1.90	74.50	23.4			
15	19	682	2.30	61.37	23.8			
17	21	602	2.60	54.18	23.9	**CG082-11P-100L-06D** **CF082-11P-100L-06D**	82 86	92
11	13	992	0.85	137.38	**	**CG073-11P-90S/L-04E** **CF073-11P-90S/L-04E**	48 52	90
12	14	902	0.95	124.97	**			
14	17	754	1.10	104.50	11.3			
15	19	686	1.20	95.06	11.8			
17	20	622	1.35	86.17	12.2			
19	22	566	1.45	78.39	12.6			
21	25	510	1.65	70.68	12.9			
23	27	464	1.80	64.30	13.1			
24	29	434	1.90	60.06	13.2			
27	32	394	2.10	54.63	13.3			
29	36	357	2.35	49.38	13.5			
32	39	324	2.45	44.92	13.6			
37	45	283	2.75	39.17	13.7			
41	49	257	2.85	35.63	13.7			

Legend see page 25

*** ... on request*

P_N = 1.1 kW								IE3
50 Hz 1.1 kW n_{50} min^{-1}	60 Hz 1.3 kW n_{60} min^{-1}	M_2 Nm	f_B	i	at 50 Hz F_{rN} kN	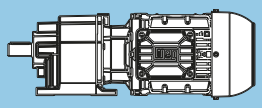	m kg	Dimension sheet see page
9.9	12	1057	0.80	95.06	**	**CG073-11P-100L-06D** **CF073-11P-100L-06D**	59 63	90
11	13	958	0.90	86.17	**			
12	15	871	0.95	78.39	**			
13	16	786	1.05	70.68	11.0			
15	18	715	1.15	64.30	11.6			
16	19	668	1.25	60.06	11.9			
17	21	607	1.40	54.63	12.3			
19	23	549	1.50	49.38	12.7			
21	26	499	1.60	44.92	12.9			
24	29	435	1.80	39.17	13.2			
27	32	396	1.85	35.63	13.3			
37	45	281	2.95	38.92	13.7	**CG072-11P-90S/L-04E** **CF072-11P-90S/L-04E**	47 51	90
24	30	433	1.90	38.92	13.2	**CG072-11P-100L-06D** **CF072-11P-100L-06D**	58 62	90
27	32	394	2.10	35.41	13.3			
31	38	340	2.45	30.55	13.5			
34	41	309	2.70	27.79	13.6			
46	56	230	3.00	20.65	13.8			
13	16	785	0.80	108.67	**	**CG063-11P-90S/L-04E** **CF063-11P-90S/L-04E**	32 37	88
16	20	646	0.95	89.54	**			
18	21	593	1.05	82.10	8.4			
20	24	529	1.15	73.28	9.0			
22	26	485	1.25	67.19	9.4			
24	30	429	1.40	59.42	9.8			
27	32	393	1.55	54.49	10.1			
29	35	359	1.70	49.74	10.3			
32	39	329	1.85	45.61	10.4			
36	44	291	2.10	40.32	10.6			
39	48	267	2.25	36.97	10.7			
14	17	747	0.85	67.19	**	**CG063-11P-100L-06D** **CF063-11P-100L-06D**	43 48	88
16	19	661	0.95	59.42	**			
17	21	606	1.00	54.49	8.2			
19	23	553	1.10	49.74	8.8			
21	25	507	1.20	45.61	9.2			
23	29	448	1.35	40.32	9.7			
26	31	411	1.50	36.97	10.0			
24	29	433	1.00	60.00	9.8	**CG062-11P-90S/L-04E** **CF062-11P-90S/L-04E**	31 36	88
26	32	397	1.00	55.02	10.1			
31	37	343	1.75	47.55	10.4			
33	40	315	1.80	43.60	10.5			
39	48	267	2.30	36.92	10.7			
43	52	244	2.50	33.86	10.8			
44	53	241	1.00	33.43	10.8			
48	58	219	2.75	30.30	10.9			
52	63	201	3.00	27.78	10.8			
55	66	191	1.80	26.49	10.6			
71	86	149	2.55	20.57	9.8			
20	24	529	1.15	47.55	9.0	**CG062-11P-100L-06D** **CF062-11P-100L-06D**	42 47	88
22	26	485	1.20	43.60	9.4			
26	31	410	1.50	36.92	10.0			
28	34	376	1.60	33.86	10.2			
31	38	337	1.80	30.30	10.4			
34	41	309	1.95	27.78	10.5			
36	43	294	1.20	26.49	10.6			
40	49	261	2.35	23.46	10.7			
44	53	239	2.55	21.51	10.8			
46	56	229	1.65	20.57	10.9			
56	68	188	2.05	16.88	10.5			
72	88	145	2.60	13.07	9.8			
21	25	511	0.80	70.71	**	**CG053-11P-90S/L-04E** **CF053-11P-90S/L-04E**	27 32	86
24	29	445	0.90	61.63	**			
26	31	404	1.00	56.02	4.9			
30	36	355	1.15	49.20	5.7			
33	39	323	1.25	44.73	6.1			

C

P_N = 1.1 kW								IE3
50 Hz 1.1 kW n_{50} min^{-1}	60 Hz 1.3 kW n_{60} min^{-1}	M_2 Nm	f_B	i	at 50 Hz F_{rN} kN	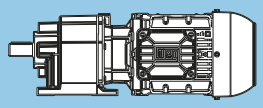	m kg	Dimension sheet see page
30	37	347	1.00	48.13	5.8	CG052-11P-90S/L-04E CF052-11P-90S/L-04E	26 31	86
33	40	316	1.00	43.75	6.1			
38	46	274	1.50	38.00	6.6			
42	51	249	1.65	34.55	6.8			
49	60	213	1.90	29.46	7.0			
50	60	211	1.00	29.17	7.1			
54	66	193	2.10	26.79	7.2			
60	73	174	2.30	24.12	7.3			
63	76	166	1.65	23.03	7.3			
66	80	158	2.55	21.92	7.4			
78	95	134	3.00	18.56	7.5			
81	99	129	2.10	17.86	7.3			
100	120	106	2.55	14.62	6.9			
25	30	422	0.95	38.00	**	CG052-11P-100L-06D CF052-11P-100L-06D	37 42	86
27	33	384	1.05	34.55	5.2			
32	39	327	1.25	29.46	6.0			
35	43	298	1.35	26.79	6.3			
39	48	268	1.50	24.12	6.6			
41	50	256	1.05	23.03	6.7			
43	52	244	1.65	21.92	6.8			
51	62	206	1.95	18.56	7.1			
53	64	199	1.35	17.86	7.1			
56	68	188	2.15	16.88	7.2			
65	79	163	1.65	14.62	7.3			
67	82	156	2.60	14.03	7.4			
74	90	142	2.85	12.75	7.4			
84	102	125	2.15	11.25	7.2			
111	135	94	2.85	8.50	6.7			
42	50	252	0.80	34.88	**	CG032-11P-90S/L-04E CF032-11P-90S/L-04E	22 24	84
46	56	229	0.90	31.67	**			
53	64	200	1.00	27.71	4.6			
58	70	182	1.15	25.17	4.5			
68	82	155	1.30	21.40	4.4			
74	90	141	0.95	19.54	**			
75	91	140	1.45	19.44	4.3			
85	103	123	1.65	17.09	4.2			
94	113	112	1.80	15.52	4.1			
113	136	93	2.15	12.92	3.9			
121	147	87	1.55	11.99	3.8			
124	150	85	2.40	11.73	3.8			
148	179	71	2.85	9.82	3.7			
152	184	69	1.90	9.57	3.6			
201	243	52	2.50	7.24	3.3			
44	54	238	0.85	21.40	**	CG032-11P-100L-06D CF032-11P-100L-06D	33 35	84
49	59	216	0.95	19.44	**			
55	67	190	1.10	17.09	4.6			
61	74	173	1.20	15.52	4.5			
73	89	144	1.40	12.92	4.3			
79	96	133	1.00	11.99	4.2			
81	98	130	1.55	11.73	4.2			
96	117	109	1.85	9.82	4.1			
99	120	106	1.25	9.57	4.0			
106	129	99	2.00	8.92	4.0			
124	151	85	2.30	7.64	3.8			
131	159	80	1.65	7.24	3.7			
136	166	77	2.50	6.94	3.7			
159	193	66	2.85	5.96	3.6			
172	209	61	2.15	5.50	3.5			
221	269	48	2.70	4.28	3.3			

Legend see page 25

*** ... on request*

P_N = 1.1 kW								IE3
50 Hz 1.1 kW n_{50} min^{-1}	60 Hz 1.3 kW n_{60} min^{-1}	M_2 Nm	f_B	i	at 50 Hz F_{rN} kN	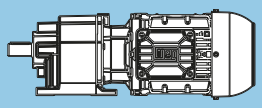	m kg	Dimension sheet see page
98	118	107	0.80	14.88	**	CG012-11P-90S/L-04E CF012-11P-90S/L-04E	20 21	82
109	132	96	0.90	13.33	**			
130	157	81	1.10	11.20	2.6			
145	175	72	1.20	10.04	2.5			
152	183	69	1.00	9.60	2.4			
177	214	59	1.45	8.22	2.4			
194	235	54	1.25	7.50	2.3			
198	239	53	1.60	7.36	2.3			
260	314	40	1.65	5.60	2.1			
345	417	30	2.20	4.22	2.0			
471	570	22	3.00	3.09	1.8			

C

Legend see page 25

*** ... on request*

P_N = 1.5 kW								IE3
50 Hz 1.5 kW n_{50} min^{-1}	60 Hz 1.8 kW n_{60} min^{-1}	M_2 Nm	f_B	i	at 50 Hz F_{rN} kN	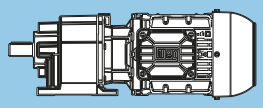	m kg	Dimension sheet see page
5.9	7.1	2435	1.85	246.43	42.9	**CG103-11P-90S/L-04F** **CF103-11P-90S/L-04F**	171 175	96
7.0	8.4	2058	2.20	208.33	43.6			
8.0	9.7	1782	2.55	180.35	44.1			
9.1	11	1578	2.90	159.72	44.4			
4.7	5.7	3030	1.00	306.73	22.7	**CG093-11P-90S/L-04F** **CF093-11P-90S/L-04F**	128 126	94
6.0	7.2	2398	1.30	242.77	26.5			
6.8	8.3	2094	1.45	211.98	27.9			
7.7	9.4	1851	1.65	187.34	28.8			
9.2	11	1565	1.95	158.42	29.7			
9.4	11	1524	2.00	154.24	29.8			
11	13	1345	2.25	136.18	30.3			
12	15	1174	2.60	118.88	30.7			
14	17	1006	3.00	101.85	31.0			
7.7	9.4	1852	0.85	187.48	**	**CG083-11P-90S/L-04F** **CF083-11P-90S/L-04F**	76 80	92
10	12	1429	1.10	144.69	21.0			
12	15	1182	1.35	119.68	22.2			
14	17	1006	1.55	101.80	22.8			
16	20	872	1.80	88.23	23.3			
19	24	736	2.15	74.50	23.6			
24	29	606	2.60	61.37	23.9			
27	32	535	2.90	54.18	24.1	**CG082-11P-90S/L-04F** **CF082-11P-90S/L-04F**	75 79	92
14	17	1032	0.80	104.50	**	**CG073-11P-90S/L-04F** **CF073-11P-90S/L-04F**	52 56	90
15	18	939	0.90	95.06	**			
17	20	851	1.00	86.17	10.4			
18	22	774	1.10	78.39	11.1			
21	25	698	1.20	70.68	11.7			
23	27	635	1.30	64.30	12.1			
24	29	593	1.40	60.06	12.4			
27	32	540	1.55	54.63	12.7			
29	36	488	1.70	49.38	13.0			
32	39	444	1.80	44.92	13.2			
37	45	387	2.00	39.17	13.4			
41	49	352	2.10	35.63	13.5			
37	45	385	2.15	38.92	13.4	**CG072-11P-90S/L-04F** **CF072-11P-90S/L-04F**	51 55	90
41	50	350	2.35	35.41	13.5			
47	57	302	2.75	30.55	13.6			
52	63	275	3.00	27.79	13.7			
20	24	724	0.85	73.28	**	**CG063-11P-90S/L-04F** **CF063-11P-90S/L-04F**	35 40	88
22	26	664	0.95	67.19	**			
24	30	587	1.05	59.42	8.4			
27	32	538	1.15	54.49	8.9			
29	35	491	1.25	49.74	9.4			
32	38	451	1.35	45.61	9.7			
36	44	398	1.55	40.32	10.0			
39	47	365	1.65	36.97	10.2			
30	37	470	1.30	47.55	9.5	**CG062-11P-90S/L-04F** **CF062-11P-90S/L-04F**	35 40	88
33	40	431	1.35	43.60	9.8			
39	48	365	1.65	36.92	10.3			
43	52	335	1.80	33.86	10.4			
48	58	299	2.05	30.30	10.6			
52	63	274	2.20	27.78	10.5			
55	66	262	1.35	26.49	10.3			
62	75	232	2.60	23.46	10.0			
67	82	213	2.85	21.51	9.8			
70	85	203	1.90	20.57	9.6			
86	104	167	2.30	16.88	9.1			
111	134	129	2.95	13.07	8.4			
29	36	486	0.85	49.20	**	**CG053-11P-90S/L-04F** **CF053-11P-90S/L-04F**	31 36	86
32	39	442	0.95	44.73	**			

Legend see page 25

*** ... on request*

P_N = 1.5 kW								IE3
50 Hz 1.5 kW n_{50} min^{-1}	60 Hz 1.8 kW n_{60} min^{-1}	M_2 Nm	f_B	i	at 50 Hz F_{rN} kN	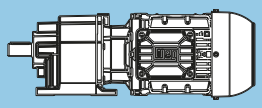	m kg	Dimension sheet see page
38	46	375	1.10	38.00	5.4	**CG052-11P-90S/L-04F** **CF052-11P-90S/L-04F**	30 35	86
42	51	341	1.20	34.55	5.8			
49	60	291	1.40	29.46	6.4			
54	66	265	1.55	26.79	6.7			
60	73	238	1.70	24.12	6.9			
63	76	228	1.20	23.03	6.9			
66	80	217	1.85	21.92	7.0			
78	95	183	2.20	18.56	7.2			
81	98	176	1.55	17.86	7.1			
86	104	167	2.40	16.88	7.0			
99	120	144	1.85	14.62	6.7			
103	125	139	2.90	14.03	6.7			
129	156	111	2.45	11.25	6.3			
58	70	249	0.85	25.17	**	**CG032-11P-90S/L-04F** **CF032-11P-90S/L-04F**	26 28	84
68	82	211	0.95	21.40	**			
75	90	192	1.05	19.44	4.0			
85	103	169	1.20	17.09	3.9			
93	113	153	1.35	15.52	3.9			
112	136	128	1.60	12.92	3.7			
121	146	118	1.10	11.99	3.6			
124	150	116	1.75	11.73	3.6			
148	179	97	2.10	9.82	3.5			
152	183	95	1.40	9.57	3.4			
163	197	88	2.25	8.92	3.4			
190	230	75	2.60	7.64	3.3			
200	242	72	1.85	7.24	3.2			
209	253	69	2.80	6.94	3.2			
264	319	54	2.40	5.50	3.0			
129	157	111	0.80	11.20	**	**CG012-11P-90S/L-04F** **CF012-11P-90S/L-04F**	23 24	82
144	175	99	0.90	10.04	**			
176	214	81	1.05	8.22	2.3			
193	234	74	0.90	7.50	**			
197	238	73	1.20	7.36	2.2			
259	313	55	1.20	5.60	2.0			
344	416	42	1.60	4.22	1.9			
469	568	31	2.20	3.09	1.8			

Legend see page 25

*** ... on request*

C

P_N = 2.2 kW								IE3
50 Hz 2.2 kW n_{50} min^{-1}	60 Hz 2.6 kW n_{60} min^{-1}	M_2 Nm	f_B	i	at 50 Hz F_{rN} kN	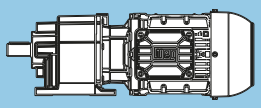	m kg	Dimension sheet see page
5.8	7.1	3608	1.25	246.43	39.4	**CG103-11P-100L-04E** **CF103-11P-100L-04E**	181 185	96
6.9	8.4	3050	1.50	208.33	41.2			
8.0	9.7	2641	1.75	180.35	42.4			
9.0	11	2338	1.95	159.72	43.1			
10	13	2023	2.25	138.17	43.7			
11	13	1951	2.35	133.24	43.8			
12	15	1721	2.65	117.56	44.2			
14	17	1510	3.00	103.15	44.5			
5.9	7.2	3554	0.85	242.77	**	**CG093-11P-100L-04E** **CF093-11P-100L-04E**	139 137	94
6.8	8.2	3104	1.00	211.98	22.1			
7.7	9.3	2743	1.10	187.34	24.6			
9.1	11	2319	1.30	158.42	26.9			
9.3	11	2258	1.35	154.24	27.1			
11	13	1994	1.55	136.18	28.3			
12	15	1741	1.75	118.88	29.2			
13	16	1561	1.95	106.60	29.7			
14	17	1491	2.05	101.85	29.9			
15	19	1379	2.20	94.21	30.2			
17	20	1269	2.40	86.68	30.5			
18	22	1166	2.60	79.66	30.7			
20	24	1065	2.85	72.72	30.9			
21	25	1003	3.00	68.48	31.0			
12	15	1752	0.90	119.68	**	**CG083-11P-100L-04E** **CF083-11P-100L-04E**	86 90	92
14	17	1490	1.05	101.80	20.7			
16	20	1292	1.20	88.23	21.7			
19	23	1091	1.45	74.50	22.5			
20	24	1052	1.50	71.84	22.7			
23	28	899	1.75	61.37	23.2			
26	32	793	2.00	54.18	23.5	**CG082-11P-100L-04E** **CF082-11P-100L-04E**	85 89	92
33	41	628	2.50	42.88	23.9			
38	47	548	2.85	37.44	23.4			
46	56	457	2.45	31.23	22.0			
20	25	1035	0.80	70.68	**	**CG073-11P-100L-04E** **CF073-11P-100L-04E**	62 66	90
22	27	941	0.90	64.30	**			
24	29	879	0.95	60.06	**			
26	32	800	1.05	54.63	10.9			
29	35	723	1.15	49.38	11.5			
30	37	697	1.20	47.62	11.7			
32	39	658	1.25	44.92	12.0			
33	40	634	1.25	43.32	12.2			
37	45	573	1.35	39.17	12.5			
40	49	522	1.40	35.63	12.8			
37	45	570	1.45	38.92	12.5	**CG072-11P-100L-04E** **CF072-11P-100L-04E**	61 65	90
41	49	518	1.60	35.41	12.8			
47	57	447	1.85	30.55	13.1			
52	63	407	2.05	27.79	13.3			
61	74	345	2.40	23.58	13.5			
67	81	314	2.65	21.45	13.6			
69	85	302	2.30	20.65	13.6			
74	89	286	2.85	19.50	13.7			
89	108	237	2.90	16.20	13.8			
26	32	798	0.80	54.49	**	**CG063-11P-100L-04E** **CF063-11P-100L-04E**	46 51	88
29	35	728	0.85	49.74	**			
31	38	668	0.90	45.61	**			
36	43	590	1.05	40.32	8.4			
39	47	541	1.15	36.97	8.9			

Legend see page 25

*** ... on request*

P_N = 2.2 kW								IE3
50 Hz 2.2 kW n_{50} min^{-1}	60 Hz 2.6 kW n_{60} min^{-1}	M_2 Nm	f_B	i	at 50 Hz F_{rN} kN	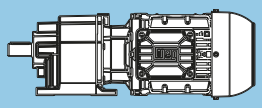	m kg	Dimension sheet see page
47	58	444	1.40	30.30	9.7	**CG062-11P-100L-04E** **CF062-11P-100L-04E**	45 50	88
52	63	407	1.50	27.78	10.0			
61	74	343	1.75	23.46	9.7			
67	81	315	1.95	21.51	9.5			
80	98	261	2.30	17.85	9.1			
85	103	247	1.55	16.88	8.8			
88	107	240	2.55	16.36	8.8			
97	119	216	2.80	14.72	8.6			
110	134	191	2.00	13.07	8.2			
144	176	146	2.60	9.94	7.6			
59	72	353	1.15	24.12	5.7	**CG052-11P-100L-04E** **CF052-11P-100L-04E**	40 45	86
65	80	321	1.25	21.92	6.1			
77	94	272	1.50	18.56	6.6			
85	103	247	1.65	16.88	6.7			
98	119	214	1.25	14.62	6.4			
102	124	205	1.95	14.03	6.5			
113	137	187	2.15	12.75	6.3			
125	152	168	2.40	11.48	6.1			
128	155	165	1.65	11.25	6.0			
138	167	153	2.65	10.43	6.0			
154	187	136	2.85	9.31	5.8			
169	205	124	2.15	8.50	5.6			
170	206	124	2.95	8.46	5.6			
206	251	102	2.65	6.96	5.3			
84	102	250	0.80	17.09	**	**CG032-11P-100L-04E** **CF032-11P-100L-04E**	36 38	84
92	112	227	0.90	15.52	**			
111	135	189	1.10	12.92	3.4			
122	149	172	1.20	11.73	3.3			
146	178	144	1.40	9.82	3.3			
150	182	140	0.95	9.57	**			
161	196	131	1.55	8.92	3.2			
188	228	112	1.75	7.64	3.1			
198	241	106	1.25	7.24	3.0			
207	251	102	1.90	6.94	3.0			
241	293	87	2.15	5.96	3.0			
261	317	81	1.65	5.50	2.9			
265	323	79	2.35	5.41	2.9			
335	408	63	2.05	4.28	2.7			
430	522	49	2.45	3.34	2.5			

Legend see page 25

*** ... on request*

C

P_N = 3.0 kW								IE3
50 Hz 3.0 kW n_{50} min^{-1}	60 Hz 3.6 kW n_{60} min^{-1}	M_2 Nm	f_B	i	at 50 Hz F_{rN} kN	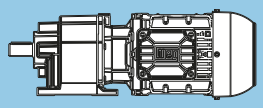	m kg	Dimension sheet see page
5.8	7.1	4903	0.95	246.43	**	**CG103-11P-L100L-04F** **CF103-11P-L100L-04F**	190 194	96
6.9	8.4	4145	1.10	208.33	37.2			
8.0	9.6	3588	1.30	180.35	39.5			
9.0	11	3178	1.45	159.72	40.9			
10	13	2749	1.65	138.17	42.1			
11	13	2651	1.70	133.24	42.3			
12	15	2339	1.95	117.56	43.1			
14	17	1991	2.30	100.05	43.8			
16	19	1777	2.55	89.30	44.1			
17	20	1717	2.65	86.31	43.6			
18	22	1573	2.90	79.08	42.6			
7.7	9.3	3727	0.85	187.34	**	**CG093-11P-L100L-04F** **CF093-11P-L100L-04F**	147 145	94
9.1	11	3152	1.00	158.42	21.7			
9.3	11	3069	1.00	154.24	22.4			
11	13	2709	1.15	136.18	24.8			
12	15	2365	1.30	118.88	26.6			
14	17	2026	1.50	101.85	28.1			
15	18	1874	1.65	94.21	28.7			
17	20	1725	1.75	86.68	29.2			
18	22	1585	1.90	79.66	29.6			
20	24	1447	2.10	72.72	30.0			
21	25	1362	2.25	68.48	30.2			
23	28	1219	2.50	61.28	30.6			
24	29	1189	2.55	59.78	30.6			
28	34	1019	2.95	51.22	31.0			
14	17	2025	0.80	101.80	**	**CG083-11P-L100L-04F** **CF083-11P-L100L-04F**	95 99	92
16	20	1755	0.90	88.23	**			
19	23	1482	1.05	74.50	20.7			
20	24	1429	1.10	71.84	21.0			
23	28	1221	1.30	61.37	22.0			
27	32	1078	1.45	54.18	22.6	**CG082-11P-L100L-04F** **CF082-11P-L100L-04F**	94 98	92
34	41	853	1.85	42.88	23.3			
38	46	745	2.10	37.44	23.6			
44	53	658	2.40	33.09	22.6			
46	56	621	1.80	31.23	22.3			
51	62	557	2.80	27.98	21.4			
58	70	492	2.30	24.72	20.5			
26	32	1087	0.80	54.63	**	**CG073-11P-L100L-04F** **CF073-11P-L100L-04F**	71 75	90
29	35	982	0.85	49.38	**			
30	37	947	0.90	47.62	**			
32	39	894	0.90	44.92	**			
33	40	862	0.95	43.32	**			
37	44	779	1.00	39.17	11.1			
40	49	709	1.05	35.63	11.6			
37	45	774	1.10	38.92	11.1	**CG072-11P-L100L-04F** **CF072-11P-L100L-04F**	70 74	90
41	49	705	1.20	35.41	11.7			
47	57	608	1.35	30.55	12.3			
52	63	553	1.50	27.79	12.6			
61	74	469	1.75	23.58	13.0			
67	81	427	1.95	21.45	13.2			
70	84	411	1.70	20.65	13.3			
74	89	388	2.10	19.50	13.4			
81	98	353	2.30	17.74	13.5			
87	105	330	2.35	16.59	13.6			
89	107	322	2.15	16.20	13.4			
95	115	300	2.55	15.09	13.6			
100	121	286	2.60	14.38	13.7			
110	133	260	2.80	13.08	13.3			
115	139	249	2.70	12.51	13.1			
119	143	242	2.90	12.14	12.9			
123	149	233	2.95	11.71	12.8			

P_N = 3.0 kW								IE3
50 Hz 3.0 kW n_{50} min^{-1}	60 Hz 3.6 kW n_{60} min^{-1}	M_2 Nm	f_B	i	at 50 Hz F_{rN} kN	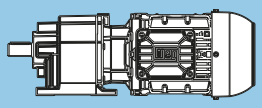	m kg	Dimension sheet see page
39	47	736	0.85	36.97	**	**CG063-11P-L100L-04F** **CF063-11P-L100L-04F**	54 59	88
48	57	603	1.00	30.30	8.3	**CG062-11P-L100L-04F** **CF062-11P-L100L-04F**	54 59	88
52	63	553	1.10	27.78	8.8			
61	74	467	1.30	23.46	9.3			
67	81	428	1.45	21.51	9.1			
81	97	355	1.70	17.85	8.7			
85	103	336	1.15	16.88	8.5			
88	106	325	1.85	16.36	8.5			
98	118	293	2.05	14.72	8.3			
107	129	268	2.25	13.49	8.1			
110	133	260	1.45	13.07	8.0			
119	144	240	2.50	12.07	7.9			
130	157	220	2.75	11.07	7.7			
140	170	204	2.95	10.26	7.6			
145	175	198	1.95	9.94	7.4			
176	212	163	2.35	8.20	7.0			
214	259	134	2.85	6.73	6.7			
60	72	480	0.85	24.12	**	**CG052-11P-L100L-04F** **CF052-11P-L100L-04F**	49 54	86
66	79	436	0.95	21.92	**			
78	94	369	1.10	18.56	5.5			
85	103	336	1.20	16.88	5.9			
98	119	291	0.95	14.62	**			
103	124	279	1.45	14.03	6.1			
113	136	254	1.60	12.75	6.0			
125	152	228	1.80	11.48	5.9			
128	155	224	1.20	11.25	5.8			
138	167	208	1.95	10.43	5.7			
155	187	185	2.10	9.31	5.6			
169	205	169	1.60	8.50	5.4			
170	206	168	2.20	8.46	5.5			
185	223	155	2.25	7.79	5.4			
203	246	141	2.35	7.08	5.2			
207	250	138	1.95	6.96	5.1			
228	276	126	2.45	6.31	5.1			
236	286	121	2.50	6.09	5.0			
251	303	114	2.55	5.74	4.9			
255	309	112	2.35	5.64	4.9			
260	314	110	2.60	5.54	4.9			
305	369	94	2.45	4.72	4.7			
376	454	76	2.65	3.83	4.4			
390	472	73	2.70	3.69	4.3			
111	135	257	0.80	12.92	**	**CG032-11P-L100L-04F** **CF032-11P-L100L-04F**	45 47	84
123	148	233	0.90	11.73	**			
147	177	195	1.05	9.82	2.9			
161	195	177	1.15	8.92	2.9			
188	228	152	1.30	7.64	2.9			
199	240	144	0.95	7.24	**			
207	251	138	1.40	6.94	2.8			
242	292	119	1.60	5.96	2.8			
262	316	109	1.20	5.50	2.7			
266	322	108	1.75	5.41	2.7			
336	407	85	1.50	4.28	2.5			
431	521	66	1.80	3.34	2.4			

Legend see page 25

*** ... on request*

C

P_N = 4.0 kW								IE3
50 Hz 4.0 kW n_{50} min^{-1}	60 Hz 4.8 kW n_{60} min^{-1}	M_2 Nm	f_B	i	at 50 Hz F_{rN} kN	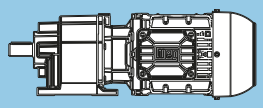	m kg	Dimension sheet see page
7.0	8.4	5488	0.85	208.33	**	**CG103-11P-112M-04E** **CF103-11P-112M-04E**	190 194	96
8.0	9.7	4751	0.95	180.35	**			
9.1	11	4208	1.10	159.72	36.9			
10	13	3640	1.25	138.17	39.3			
11	13	3510	1.30	133.24	39.7			
12	15	3097	1.50	117.56	41.1			
14	18	2636	1.75	100.05	42.4			
16	20	2353	1.95	89.30	43.0			
17	20	2274	2.00	86.31	43.2			
18	22	2083	2.20	79.08	43.4			
21	26	1802	2.50	68.41	40.9			
22	27	1738	2.60	65.97	40.3			
25	30	1534	2.95	58.21	38.4			
11	13	3588	0.85	136.18	**	**CG093-11P-112M-04E** **CF093-11P-112M-04E**	148 146	94
12	15	3132	1.00	118.88	21.9			
14	17	2683	1.15	101.85	24.9			
15	19	2482	1.25	94.21	26.1			
17	20	2284	1.35	86.68	27.0			
18	22	2099	1.45	79.66	27.8			
20	24	1916	1.60	72.72	28.5			
21	26	1804	1.70	68.48	28.9			
24	29	1575	1.95	59.78	29.7			
28	34	1349	2.25	51.22	30.3			
29	36	1301	2.35	49.39	30.4			
33	40	1148	2.65	43.59	30.7			
37	44	1043	2.85	39.60	29.7	**CG092-11P-112M-04E** **CF092-11P-112M-04E**	146 144	94
64	78	595	2.85	22.58	24.4			
19	24	1963	0.80	74.50	**	**CG083-11P-112M-04E** **CF083-11P-112M-04E**	95 99	92
20	24	1893	0.85	71.84	**			
24	29	1617	1.00	61.37	19.9			
27	32	1427	1.10	54.18	21.0	**CG082-11P-112M-04E** **CF082-11P-112M-04E**	94 98	92
34	41	1130	1.40	42.88	22.4			
39	47	986	1.60	37.44	22.9			
44	53	872	1.80	33.09	23.0			
46	56	823	1.40	31.23	22.7			
52	63	737	2.15	27.98	21.6			
59	71	651	1.75	24.72	20.7			
60	73	634	2.35	24.05	20.4			
67	81	569	2.35	21.58	19.7			
69	84	553	2.60	21.00	19.4			
76	92	503	2.60	19.08	18.8			
81	98	474	2.90	17.99	18.3			
84	101	457	2.95	17.35	18.1			
41	49	939	0.80	35.63	**	**CG073-11P-112M-04E** **CF073-11P-112M-04E**	71 75	90

Legend see page 25

*** ... on request*

P_N = 4.0 kW								IE3
50 Hz 4.0 kW n_{50} min^{-1}	60 Hz 4.8 kW n_{60} min^{-1}	M_2 Nm	f_B	i	at 50 Hz F_{rN} kN	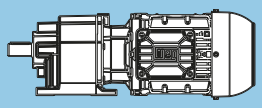	m kg	Dimension sheet see page
37	45	1025	0.80	38.92	**	**CG072-11P-112M-04E** **CF072-11P-112M-04E**	70 74	90
41	50	933	0.90	35.41	**			
47	57	805	1.05	30.55	10.8			
52	63	732	1.15	27.79	11.3			
61	74	621	1.35	23.58	12.0			
68	82	565	1.50	21.45	12.0			
70	85	544	1.30	20.65	11.2			
74	90	514	1.60	19.50	12.3			
82	99	467	1.75	17.74	12.2			
87	106	437	1.80	16.59	12.4			
90	108	427	1.65	16.20	11.6			
96	116	398	1.90	15.09	12.3			
101	122	379	1.95	14.38	12.3			
111	134	345	2.10	13.08	12.2			
116	140	330	2.05	12.51	11.7			
119	145	320	2.20	12.14	12.3			
124	150	308	2.25	11.71	12.2			
131	159	291	2.35	11.04	12.1			
136	165	281	2.40	10.65	12.1			
140	170	272	2.30	10.34	11.6			
145	176	263	2.50	10.00	12.0			
159	193	240	2.70	9.10	11.8			
165	199	232	2.60	8.80	11.4			
190	230	201	2.85	7.63	11.1			
48	58	798	0.80	30.30	**	**CG062-11P-112M-04E** **CF062-11P-112M-04E**	54 59	88
52	63	732	0.85	27.78	**			
62	75	618	1.00	23.46	8.1			
67	82	567	1.10	21.51	8.6			
81	98	470	1.30	17.85	8.3			
86	104	445	0.85	16.88	**			
89	107	431	1.40	16.36	8.1			
99	119	388	1.55	14.72	7.9			
107	130	355	1.70	13.49	7.8			
111	134	344	1.10	13.07	7.6			
120	145	318	1.90	12.07	7.6			
131	159	292	2.10	11.07	7.4			
141	171	270	2.25	10.26	7.3			
146	177	262	1.45	9.94	7.2			
154	187	248	2.40	9.40	7.1			
172	208	222	2.50	8.43	7.0			
177	214	216	1.75	8.20	6.8			
178	216	214	2.50	8.13	6.9			
188	227	204	2.55	7.73	6.8			
194	235	197	2.60	7.46	6.7			
215	261	177	2.15	6.73	6.5			
217	262	176	2.70	6.69	6.5			
237	286	161	2.75	6.13	6.4			
254	307	150	2.50	5.71	6.2			
309	373	124	2.65	4.70	5.9			
320	387	119	2.70	4.53	5.8			
389	471	98	2.85	3.73	5.5			

Legend see page 25

*** ... on request*

C

P_N = 4.0 kW								IE3
50 Hz 4.0 kW n_{50} min^{-1}	60 Hz 4.8 kW n_{60} min^{-1}	M_2 Nm	f_B	i	at 50 Hz F_{rN} kN	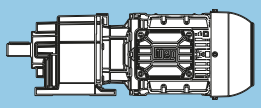	m kg	Dimension sheet see page
78	95	489	0.85	18.56	**			
86	104	445	0.90	16.88	**			
103	125	370	1.10	14.03	5.5			
114	138	336	1.20	12.75	5.6			
126	153	302	1.35	11.48	5.5			
129	156	296	0.95	11.25	**			
139	168	275	1.50	10.43	5.4			
156	189	245	1.60	9.31	5.3			
171	207	223	1.65	8.46	5.2			
186	225	205	1.70	7.79	5.1	**CG052-11P-112M-04E**	49	86
205	248	187	1.80	7.08	5.0	**CF052-11P-112M-04E**	54	
208	252	183	1.50	6.96	4.9			
230	278	166	1.85	6.31	4.9			
238	288	160	1.90	6.09	4.8			
253	306	151	1.95	5.74	4.8			
257	311	149	1.75	5.64	4.7			
262	317	146	1.95	5.54	4.7			
307	372	124	1.85	4.72	4.5			
379	458	101	2.00	3.83	4.3			
393	476	97	2.05	3.69	4.2			

Legend see page 25

*** ... on request*

P_N = 5.5 kW								IE3
50 Hz 5.5 kW n_{50} min^{-1}	60 Hz 6.6 kW n_{60} min^{-1}	M_2 Nm	f_B	i	at 50 Hz F_{rN} kN	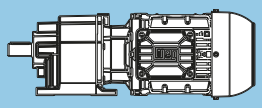	m kg	Dimension sheet see page
9.2	11	5726	0.80	159.72	**	**CG103-11P-132S-04E** **CF103-11P-132S-04E**	210 214	96
11	13	4954	0.95	138.17	**			
12	15	4215	1.10	117.56	36.9			
14	17	3698	1.25	103.15	39.1			
15	18	3587	1.30	100.05	39.5			
16	20	3202	1.45	89.30	40.8			
17	20	3094	1.50	86.31	41.1			
19	22	2835	1.60	79.08	41.9			
21	26	2453	1.85	68.41	41.9			
22	27	2365	1.95	65.97	41.2			
25	30	2087	2.20	58.21	39.2			
30	36	1776	2.55	49.54	36.6			
34	41	1532	2.95	42.74	34.9			
14	17	3652	0.85	101.85	**	**CG093-11P-132S-04E** **CF093-11P-132S-04E**	168 166	94
15	18	3521	0.90	98.21	**			
16	19	3378	0.90	94.21	**			
17	20	3108	1.00	86.68	22.1			
18	22	2856	1.10	79.66	23.9			
20	24	2607	1.20	72.72	25.4			
21	26	2455	1.25	68.48	26.2			
24	29	2197	1.40	61.28	27.4			
25	30	2143	1.40	59.78	27.7			
29	34	1836	1.65	51.22	28.8			
30	36	1771	1.70	49.39	29.1			
34	40	1563	1.95	43.59	29.7			
40	48	1311	2.30	36.57	29.5			
48	57	1105	2.60	30.81	27.5			
37	45	1420	2.10	39.60	30.1	**CG092-11P-132S-04E** **CF092-11P-132S-04E**	166 164	94
44	53	1200	2.50	33.48	28.4			
51	61	1039	2.90	28.98	26.9			
65	78	810	2.10	22.58	24.7			
77	92	684	2.50	19.09	23.2			
89	107	593	2.90	16.53	22.0			
27	33	1943	0.80	54.18	**	**CG082-11P-132S-04E** **CF082-11P-132S-04E**	114 118	92
34	41	1537	1.05	42.88	20.4			
39	47	1342	1.20	37.44	21.4			
44	53	1186	1.35	33.09	22.2			
47	57	1120	1.00	31.23	22.4			
52	63	1003	1.55	27.98	22.1			
59	71	886	1.30	24.72	21.2			
61	73	862	1.75	24.05	20.8			
68	82	774	1.75	21.58	20.1			
70	84	753	1.90	21.00	19.7			
77	93	684	1.95	19.08	19.1			
81	98	645	2.10	17.99	18.6			
84	102	622	2.20	17.35	18.4			
91	109	578	2.25	16.13	18.0			
96	115	549	2.35	15.31	17.5			
106	127	497	2.50	13.87	17.0			
114	137	460	2.70	12.84	16.4			
121	146	434	2.75	12.10	16.1			
135	163	388	3.00	10.82	15.4			

Legend see page 25

*** ... on request*

C

P_N = 5.5 kW								IE3
50 Hz 5.5 kW n_{50} min^{-1}	60 Hz 6.6 kW n_{60} min^{-1}	M_2 Nm	f_B	i	at 50 Hz F_{rN} kN	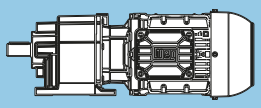	m kg	Dimension sheet see page
53	64	996	0.85	27.79	**	CG072-11P-132S-04E CF072-11P-132S-04E	90 94	90
62	75	845	1.00	23.58	8.5			
68	82	769	1.10	21.45	8.8			
71	85	740	0.95	20.65	**			
75	91	699	1.20	19.50	9.4			
83	99	636	1.25	17.74	9.5			
88	106	595	1.30	16.59	9.9			
90	109	581	1.20	16.20	9.0			
97	117	541	1.40	15.09	10.0			
102	123	516	1.45	14.38	10.2			
112	135	469	1.55	13.08	10.3			
117	141	449	1.50	12.51	9.6			
121	145	435	1.60	12.14	10.4			
125	151	420	1.65	11.71	10.5			
133	160	396	1.75	11.04	10.4			
138	166	382	1.80	10.65	10.4			
142	171	371	1.70	10.34	9.9			
147	177	359	1.85	10.00	10.5			
161	194	326	1.95	9.10	10.5			
166	201	316	1.90	8.80	10.0			
192	231	274	2.10	7.63	10.0			
227	274	231	2.35	6.44	9.9			
236	284	223	2.40	6.21	9.9			
276	333	190	2.70	5.30	9.7			
68	82	771	0.80	21.51	**	CG062-11P-132S-04E CF062-11P-132S-04E	74 79	88
82	99	640	0.95	17.85	**			
90	108	587	1.05	16.36	7.5			
100	120	528	1.15	14.72	7.4			
109	131	484	1.25	13.49	7.3			
112	135	469	0.85	13.07	**			
121	146	433	1.40	12.07	7.2			
132	159	397	1.55	11.07	7.1			
143	172	368	1.65	10.26	6.9			
147	178	356	1.10	9.94	6.8			
156	188	337	1.75	9.40	6.8			
174	209	302	1.85	8.43	6.7			
179	215	294	1.30	8.20	6.5			
180	217	291	1.85	8.13	6.6			
190	228	277	1.90	7.73	6.5			
196	237	267	1.90	7.46	6.5			
218	262	241	1.60	6.73	6.2			
219	264	240	2.00	6.69	6.3			
239	288	220	2.05	6.13	6.2			
257	309	205	1.85	5.71	6.0			
312	376	169	1.95	4.70	5.7			
323	390	162	2.00	4.53	5.6			
393	473	134	2.10	3.73	5.4			
104	126	503	0.80	14.03	**	CG052-11P-132S-04E CF052-11P-132S-04E	69 74	86
115	138	457	0.90	12.75	**			
128	154	412	1.00	11.48	4.7			
140	169	374	1.10	10.43	5.0			
157	190	334	1.20	9.31	4.9			
172	208	305	0.90	8.50	**			
173	209	303	1.25	8.46	4.8			
188	227	279	1.25	7.79	4.8			
207	249	254	1.30	7.08	4.7			
210	254	250	1.10	6.96	4.6			
232	280	226	1.40	6.31	4.6			
241	290	218	1.40	6.09	4.6			
255	307	206	1.45	5.74	4.5			
260	313	202	1.30	5.64	4.4			
264	319	199	1.45	5.54	4.5			
310	374	169	1.40	4.72	4.3			
383	461	137	1.50	3.83	4.1			
397	478	132	1.50	3.69	4.0			

P_N = 7.5 kW								IE3
50 Hz 7.5 kW n_{50} min^{-1}	60 Hz 9.0 kW n_{60} min^{-1}	M_2 Nm	f_B	i	at 50 Hz F_{rN} kN	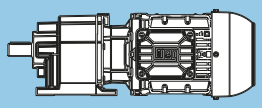	m kg	Dimension sheet see page
12	15	5966	0.80	122.02	**	**CG103-11P-L132M-04F** **CF103-11P-L132M-04F**	219 223	96
14	17	5043	0.90	103.15	**			
15	18	4892	0.95	100.05	**			
16	20	4366	1.05	89.30	36.2			
17	21	4220	1.10	86.31	36.9			
19	22	3866	1.20	79.08	38.4			
21	26	3345	1.35	68.41	40.3			
22	27	3225	1.40	65.97	40.7			
25	30	2846	1.60	58.21	40.3			
30	36	2422	1.90	49.54	37.6			
34	41	2090	2.20	42.74	35.7			
44	54	1614	2.30	33.01	32.3	**CG102-11P-L132M-04F** **CF102-11P-L132M-04F**	214 218	96
60	73	1193	2.50	24.40	28.7			
76	92	937	2.30	19.17	26.5			
103	125	693	2.50	14.17	23.7			
18	22	3895	0.80	79.66	**	**CG093-11P-L132M-04F** **CF093-11P-L132M-04F**	177 175	94
20	24	3555	0.85	72.72	**			
21	26	3348	0.90	68.48	**			
24	29	2996	1.05	61.28	22.9			
25	30	2923	1.05	59.78	23.4			
29	35	2504	1.20	51.22	25.9			
30	36	2415	1.25	49.39	26.4			
34	41	2131	1.45	43.59	27.7			
40	48	1788	1.70	36.57	29.0			
48	57	1506	1.90	30.81	28.2			
37	45	1936	1.55	39.60	28.5	**CG092-11P-L132M-04F** **CF092-11P-L132M-04F**	175 173	94
44	53	1637	1.85	33.48	29.2			
51	61	1417	2.15	28.98	27.6			
57	69	1255	2.40	25.67	26.4			
65	78	1104	1.55	22.58	25.3			
66	80	1085	2.80	22.20	24.9			
68	83	1047	2.50	21.41	24.6			
77	93	933	1.85	19.09	23.7			
89	107	808	2.15	16.53	22.4			
100	121	716	2.55	14.64	21.4			
116	140	619	2.95	12.66	20.3			
120	145	597	2.50	12.21	20.0			
39	47	1830	0.85	37.44	**	**CG082-11P-L132M-04F** **CF082-11P-L132M-04F**	123 127	92
44	53	1618	1.00	33.09	19.9			
52	63	1368	1.15	27.98	21.3			
59	72	1209	0.95	24.72	**			
61	74	1176	1.30	24.05	21.4			
68	82	1055	1.25	21.58	20.7			
70	84	1027	1.40	21.00	20.2			
77	93	933	1.45	19.08	19.7			
81	98	880	1.55	17.99	19.1			
84	102	848	1.60	17.35	18.8			
91	110	789	1.65	16.13	18.4			
96	116	749	1.75	15.31	17.9			
106	128	678	1.85	13.87	17.3			
114	138	628	1.95	12.84	16.7			
121	146	592	2.00	12.10	16.5			
135	164	529	2.20	10.82	15.7			
141	171	507	2.25	10.37	15.5			
147	177	489	2.30	10.00	15.3			
166	200	432	2.45	8.83	14.6			
198	239	362	2.80	7.40	13.7			

Legend see page 25

*** ... on request*

P_N = 7.5 kW								IE3
50 Hz 7.5 kW n_{50} min^{-1}	60 Hz 9.0 kW n_{60} min^{-1}	M_2 Nm	f_B	i	at 50 Hz F_{rN} kN	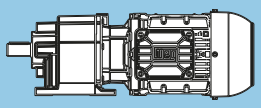	m kg	Dimension sheet see page
68	83	1049	0.80	21.45	**	**CG072-11P-L132M-04F** **CF072-11P-L132M-04F**	99 103	90
75	91	953	0.85	19.50	**			
83	100	867	0.95	17.74	**			
88	107	811	0.95	16.59	**			
90	109	792	0.90	16.20	**			
97	117	738	1.05	15.09	7.0			
102	123	703	1.05	14.38	7.4			
112	135	639	1.15	13.08	7.7			
117	141	612	1.10	12.51	6.9			
121	146	594	1.20	12.14	8.0			
125	151	573	1.20	11.71	8.2			
133	160	540	1.30	11.04	8.2			
138	166	521	1.30	10.65	8.3			
142	171	506	1.25	10.34	7.6			
147	177	489	1.35	10.00	8.5			
161	195	445	1.45	9.10	8.7			
166	201	430	1.40	8.80	8.0			
192	232	373	1.55	7.63	8.3			
227	275	315	1.75	6.44	8.5			
236	285	304	1.80	6.21	8.5			
276	334	259	2.00	5.30	8.5			
90	108	800	0.80	16.36	**	**CG062-11P-L132M-04F** **CF062-11P-L132M-04F**	83 88	88
100	120	720	0.85	14.72	**			
109	131	660	0.95	13.49	**			
121	147	590	1.05	12.07	6.7			
132	160	541	1.15	11.07	6.6			
143	173	502	1.20	10.26	6.5			
147	178	486	0.80	9.94	**			
156	188	460	1.30	9.40	6.4			
174	210	412	1.35	8.43	6.3			
179	216	401	0.95	8.20	**			
180	218	397	1.35	8.13	6.2			
190	229	378	1.40	7.73	6.2			
196	237	365	1.40	7.46	6.1			
218	263	329	1.15	6.73	5.9			
219	265	327	1.45	6.69	6.0			
239	289	300	1.50	6.13	5.9			
257	310	279	1.35	5.71	5.7			
312	377	230	1.45	4.70	5.5			
323	391	221	1.45	4.53	5.4			
393	475	182	1.55	3.73	5.2			
140	170	510	0.80	10.43	**	**CG052-11P-L132M-04F** **CF052-11P-L132M-04F**	78 83	86
157	190	455	0.85	9.31	**			
173	209	414	0.90	8.46	**			
188	227	381	0.95	7.79	**			
207	250	346	0.95	7.08	**			
210	254	340	0.80	6.96	**			
232	281	309	1.00	6.31	4.3			
241	291	298	1.05	6.09	4.2			
255	308	281	1.05	5.74	4.2			
260	314	276	0.95	5.64	**			
264	319	271	1.05	5.54	4.2			
310	375	231	1.00	4.72	4.0			
383	462	187	1.10	3.83	3.8			
397	480	180	1.10	3.69	3.8			

Legend see page 25

*** ... on request*

P_N = 9.2 kW								IE3
50 Hz 9.2 kW n_{50} min^{-1}	60 Hz 11 kW n_{60} min^{-1}	M_2 Nm	f_B	i	at 50 Hz F_{rN} kN	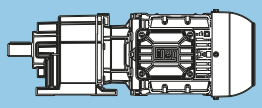	m kg	Dimension sheet see page
16	20	5374	0.85	89.30	**	**CG103-11P-L132M-04G** **CF103-11P-L132M-04G**	228 232	96
17	20	5194	0.90	86.31	**			
18	22	4759	0.95	79.08	**			
21	26	4117	1.10	68.41	37.3			
22	27	3970	1.15	65.97	38.0			
25	30	3503	1.30	58.21	39.8			
29	36	2981	1.55	49.54	38.8			
34	41	2572	1.75	42.74	36.4			
44	53	1986	1.90	33.01	32.8	**CG102-11P-L132M-04G** **CF102-11P-L132M-04G**	223 227	96
50	61	1755	2.60	29.16	31.3			
58	70	1523	3.00	25.31	29.5			
60	72	1468	2.00	24.40	29.1			
76	92	1154	1.90	19.17	26.8			
86	104	1019	2.65	16.93	25.6			
103	125	853	2.00	14.17	23.9			
24	29	3688	0.85	61.28	**	**CG093-11P-L132M-04G** **CF093-11P-L132M-04G**	186 184	94
29	34	3082	1.00	51.22	22.3			
30	36	2972	1.05	49.39	23.1			
33	40	2623	1.15	43.59	25.3			
40	48	2201	1.40	36.57	27.4			
47	57	1854	1.55	30.81	28.8			
37	45	2383	1.25	39.60	26.6	**CG092-11P-L132M-04G** **CF092-11P-L132M-04G**	184 182	94
44	53	2015	1.50	33.48	28.2			
50	61	1744	1.75	28.98	28.3			
57	69	1545	1.95	25.67	26.9			
65	78	1359	1.25	22.58	25.8			
66	80	1336	2.25	22.20	25.3			
68	82	1288	2.00	21.41	25.0			
76	92	1149	1.50	19.09	24.2			
77	93	1137	2.65	18.89	23.8			
88	107	995	1.75	16.53	22.8			
100	121	881	2.10	14.64	21.7			
115	139	762	2.40	12.66	20.6			
120	145	735	2.00	12.21	20.3			
136	164	648	2.85	10.77	19.3			
44	53	1991	0.80	33.09	**	**CG082-11P-L132M-04G** **CF082-11P-L132M-04G**	132 136	92
52	63	1684	0.95	27.98	**			
59	71	1488	0.80	24.72	**			
61	73	1447	1.05	24.05	20.9			
68	82	1299	1.05	21.58	21.2			
70	84	1264	1.15	21.00	20.7			
77	93	1148	1.15	19.08	20.1			
81	98	1083	1.25	17.99	19.5			
84	102	1044	1.30	17.35	19.2			
91	109	971	1.35	16.13	18.8			
95	115	921	1.40	15.31	18.3			
105	127	835	1.50	13.87	17.7			
114	137	773	1.60	12.84	17.0			
121	146	728	1.65	12.10	16.8			
135	163	651	1.80	10.82	15.9			
141	170	624	1.80	10.37	15.8			
146	177	602	1.85	10.00	15.6			
165	200	531	2.00	8.83	14.8			
197	239	445	2.25	7.40	13.9			
234	283	376	2.55	6.24	13.0			

Legend see page 25

*** ... on request*

P_N = 9.2 kW								IE3
50 Hz 9.2 kW n_{50} min^{-1}	60 Hz 11 kW n_{60} min^{-1}	M_2 Nm	f_B	i	at 50 Hz F_{rN} kN	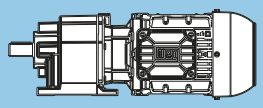	m kg	Dimension sheet see page
88	106	998	0.80	16.59	**	**CG072-11P-L132M-04G** **CF072-11P-L132M-04G**	118 112	90
97	117	908	0.85	15.09	**			
102	123	865	0.85	14.38	**			
112	135	787	0.95	13.08	**			
117	141	753	0.90	12.51	**			
120	145	731	0.95	12.14	**			
125	151	705	1.00	11.71	6.2			
132	160	664	1.05	11.04	6.3			
137	166	641	1.05	10.65	6.5			
141	171	622	1.05	10.34	5.7			
146	177	602	1.10	10.00	6.9			
160	194	548	1.20	9.10	7.1			
166	201	530	1.15	8.80	6.4			
191	231	459	1.25	7.63	6.9			
227	274	388	1.40	6.44	7.2			
235	284	374	1.45	6.21	7.3			
275	333	319	1.60	5.30	7.6			
121	146	726	0.85	12.07	**	**CG062-11P-L132M-04G** **CF062-11P-L132M-04G**	92 97	88
132	159	666	0.95	11.07	**			
142	172	617	1.00	10.26	6.1			
155	188	566	1.05	9.40	6.0			
173	209	507	1.10	8.43	6.0			
178	215	493	0.80	8.20	**			
180	217	489	1.10	8.13	5.9			
189	228	465	1.15	7.73	5.9			
196	237	449	1.15	7.46	5.8			
217	262	405	0.95	6.73	**			
218	264	403	1.20	6.69	5.8			
238	288	369	1.25	6.13	5.6			
256	309	344	1.10	5.71	5.5			
311	376	283	1.15	4.70	5.3			
322	390	273	1.20	4.53	5.2			
391	473	224	1.25	3.73	5.0			

Legend see page 25

*** ... on request*

P_N = 11 kW								IE3
50 Hz 11 kW n_{50} min^{-1}	60 Hz 13 kW n_{60} min^{-1}	M_2 Nm	f_B	i	at 50 Hz F_{rN} kN	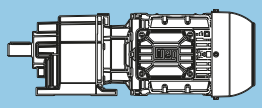	m kg	Dimension sheet see page
19	22	5651	0.80	79.08	**	**CG103-22P-160M-04E** **CF103-22P-160M-04E**	285 289	96
20	25	5174	0.90	72.40	**			
21	26	4889	0.95	68.41	**			
25	30	4207	1.10	58.87	36.9			
30	36	3540	1.30	49.54	39.2			
32	39	3289	1.40	46.03	38.1			
34	42	3054	1.50	42.74	37.1			
41	50	2562	1.80	35.85	34.4			
50	61	2083	2.20	29.15	31.7			
65	78	1629	2.80	22.79	28.7			
50	61	2084	2.20	29.16	31.7	**CG102-22P-160M-04E** **CF102-22P-160M-04E**	280 284	96
58	70	1809	2.50	25.31	29.9			
67	81	1563	2.90	21.87	28.3			
87	105	1210	2.25	16.93	25.8			
100	121	1050	2.60	14.69	24.5			
116	140	908	3.00	12.70	23.2			
29	35	3660	0.85	51.22	**	**CG093-22P-160M-04E** **CF093-22P-160M-04E**	243 241	94
34	41	3115	1.00	43.59	22.0			
40	49	2613	1.15	36.57	25.3			
48	58	2202	1.30	30.81	27.4			
58	70	1805	1.50	25.26	27.2			
57	69	1834	1.65	25.67	27.4	**CG092-22P-160M-04E** **CF092-22P-160M-04E**	241 239	94
66	80	1586	1.90	22.20	25.8			
78	94	1350	2.25	18.89	24.1			
91	110	1149	2.65	16.08	22.7			
100	121	1046	1.75	14.64	22.1			
116	140	905	2.05	12.66	20.8			
136	165	770	2.40	10.77	19.6			
160	194	655	2.80	9.17	18.4			
70	85	1501	0.95	21.00	**	**CG082-22P-160M-04E** **CF082-22P-160M-04E**	189 193	92
82	99	1286	1.10	17.99	19.8			
96	116	1094	1.20	15.31	18.5			
114	138	918	1.35	12.84	17.3			
121	147	865	1.40	12.10	17.0			
136	164	773	1.50	10.82	16.1			
142	171	741	1.55	10.37	16.0			
166	200	634	1.75	8.87	14.9			
199	240	529	1.90	7.40	14.0			
236	284	446	2.15	6.24	13.1			
287	347	366	2.40	5.12	12.2			
112	136	935	0.80	13.08	**	**CG072-22P-160M-04E** **CF072-22P-160M-04E**	165 169	90
121	146	868	0.80	12.14	**			
133	161	789	0.90	11.04	**			
147	178	715	0.95	10.00	**			
162	195	650	1.00	9.10	5.5			
193	233	545	1.05	7.63	5.3			
228	276	460	1.20	6.44	6.0			
277	335	379	1.35	5.30	6.5			

Legend see page 25

*** ... on request*

C

P_N = 15 kW								IE3
50 Hz 15 kW n_{50} min^{-1}	60 Hz 18 kW n_{60} min^{-1}	M_2 Nm	f_B	i	at 50 Hz F_{rN} kN	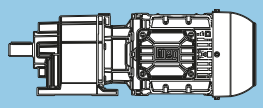	m kg	Dimension sheet see page
25	30	5756	0.80	58.87	**	**CG103-22P-160L-04F** **CF103-22P-160L-04F**	308 312	96
30	36	4844	0.95	49.54	**			
32	39	4501	1.00	46.03	35.5			
34	42	4179	1.10	42.74	37.1			
41	50	3505	1.30	35.85	35.8			
50	61	2850	1.60	29.15	32.9			
64	78	2228	2.05	22.79	29.7			
50	61	2851	1.60	29.16	32.9	**CG102-22P-160L-04F** **CF102-22P-160L-04F**	303 307	96
58	70	2475	1.85	25.31	30.9			
67	81	2138	2.15	21.87	29.1			
78	95	1829	2.50	18.71	27.4			
87	105	1655	1.65	16.93	26.6			
91	110	1580	2.85	16.16	25.8			
100	121	1436	1.90	14.69	25.1			
115	140	1242	2.20	12.70	23.8			
135	163	1062	2.55	10.86	22.3			
156	189	917	2.95	9.38	21.1			
40	49	3576	0.85	36.57	**	**CG093-22P-160L-04F** **CF093-22P-160L-04F**	266 264	94
48	58	3013	0.95	30.81	**			
58	70	2470	1.10	25.26	26.1			
57	69	2510	1.20	25.67	25.9	**CG092-22P-160L-04F** **CF092-22P-160L-04F**	264 262	94
66	80	2171	1.40	22.20	26.8			
78	94	1847	1.65	18.89	25.0			
91	110	1572	1.95	16.08	23.4			
100	121	1432	1.30	14.64	22.8			
106	128	1356	2.25	13.87	22.0			
116	140	1238	1.50	12.66	21.5			
126	153	1137	2.65	11.63	20.5			
136	165	1053	1.75	10.77	20.1			
160	194	897	2.05	9.17	18.9			
185	224	773	2.40	7.91	17.8			
221	268	648	2.85	6.63	16.6			
81	99	1759	0.80	17.99	**	**CG082-22P-160L-04F** **C0F82-22P-160L-04F**	212 216	92
96	116	1497	0.90	15.31	**			
114	138	1256	1.00	12.84	17.9			
121	147	1183	1.00	12.10	17.7			
135	164	1058	1.10	10.82	16.7			
141	171	1014	1.15	10.37	16.6			
165	200	867	1.30	8.87	15.4			
166	201	863	1.25	8.83	15.5			
198	240	724	1.40	7.40	14.4			
235	284	610	1.55	6.24	13.5			
286	347	501	1.80	5.12	12.5			
192	233	746	0.80	7.63	**	**CG072-22P-160L-04F** **CF072-22P-160L-04F**	188 192	90
227	276	630	0.90	6.44	**			
276	335	518	1.00	5.30	4.2			

Legend see page 25

*** ... on request*

P_N = 18.5 kW								IE3
50 Hz 18.5 kW n_{50} min^{-1}	60 Hz 22 kW n_{60} min^{-1}	M_2 Nm	f_B	i	at 50 Hz F_{rN} kN	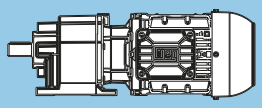	m kg	Dimension sheet see page
58	70	3042	1.50	25.31	31.8	**CG102-22P-180M-04E** **CF102-22P-180M-04E**	317 321	96
67	81	2628	1.75	21.87	29.9			
79	95	2249	2.05	18.71	27.9			
91	110	1942	2.35	16.16	26.3			
100	121	1766	1.55	14.69	25.7			
108	130	1643	2.75	13.67	24.6			
116	140	1526	1.80	12.70	24.2			
135	163	1305	2.10	10.86	22.7			
157	189	1127	2.40	9.38	21.4			
185	224	953	2.85	7.93	20.1			
66	80	2668	1.15	22.20	25.0	**CG092-22P-180M-04E** **CF092-22P-180M-04E**	278 276	94
78	94	2270	1.35	18.89	25.7			
91	110	1933	1.60	16.08	24.0			
106	128	1667	1.80	13.87	22.6			
116	140	1522	1.20	12.66	22.0			
126	153	1398	2.15	11.63	21.0			
136	165	1294	1.45	10.77	20.6			
155	188	1137	2.50	9.46	19.3			
160	194	1102	1.70	9.17	19.3			
186	224	951	1.95	7.91	18.1			
199	240	889	2.95	7.40	17.5			
222	268	797	2.30	6.63	16.9			
273	329	648	2.85	5.39	15.6			
114	138	1543	0.80	12.84	**	**CG082-22P-180M-04E** **CF082-22P-180M-04E**	226 230	92
136	164	1300	0.90	10.82	**			
142	171	1246	0.90	10.37	**			
166	200	1066	1.05	8.87	15.7			
199	240	889	1.15	7.40	14.8			
236	284	750	1.30	6.24	13.8			
287	347	615	1.45	5.12	12.7			

Legend see page 25

*** ... on request*

C

P_N = 22 kW								IE3
50 Hz 22 kW n_{50} min^{-1}	60 Hz 26 kW n_{60} min^{-1}	M_2 Nm	f_B	i	at 50 Hz F_{rN} kN	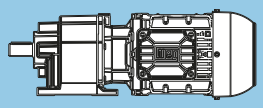	m kg	Dimension sheet see page
58	70	3617	1.25	25.31	32.6	**CG102-22P-180L-04F** **CF102-22P-180L-04F**	338 342	96
67	81	3126	1.45	21.87	30.6			
79	95	2674	1.70	18.71	28.5			
91	110	2310	1.95	16.16	26.9			
100	121	2100	1.30	14.69	26.2			
108	130	1954	2.35	13.67	25.1			
116	140	1815	1.50	12.70	24.6			
132	159	1594	2.85	11.15	23.1			
135	163	1552	1.75	10.86	23.1			
157	189	1341	2.05	9.38	21.8			
185	224	1133	2.40	7.93	20.4			
227	274	925	2.95	6.47	18.8			
66	80	3173	0.95	22.20	**	**CG092-22P-180L-04F** **CF092-22P-180L-04F**	299 297	94
78	94	2700	1.15	18.89	24.8			
91	110	2298	1.35	16.08	24.7			
106	128	1982	1.55	13.87	23.1			
116	140	1809	1.05	12.66	22.6			
126	153	1662	1.80	11.63	21.5			
136	165	1539	1.20	10.77	21.1			
155	188	1352	2.10	9.46	19.7			
160	194	1311	1.40	9.17	19.7			
186	224	1131	1.65	7.91	18.5			
199	240	1058	2.50	7.40	17.8			
222	268	948	1.95	6.63	17.2			
273	329	770	2.40	5.39	15.8			
142	171	1482	0.80	10.37	**	**CG082-22P-180L-04F** **CF082-22P-180L-04F**	247 251	92
166	200	1268	0.90	8.87	**			
199	240	1058	0.95	7.40	**			
236	284	892	1.10	6.24	14.1			
287	347	732	1.20	5.12	13.0			

P_N = 30 kW								IE3
50 Hz 30 kW n_{50} min^{-1}	60 Hz 36 kW n_{60} min^{-1}	M_2 Nm	f_B	i	at 50 Hz F_{rN} kN	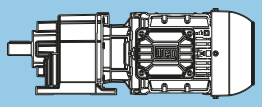	m kg	Dimension sheet see page
68	81	4234	1.10	21.87	32.1	**CG102-22P-200L-04E** **CF102-22P-200L-04E**	396 400	96
79	95	3622	1.25	18.71	29.9			
92	110	3128	1.45	16.16	28.0			
108	130	2646	1.75	13.67	26.1			
117	140	2458	1.10	12.70	25.6			
133	160	2158	2.10	11.15	23.9			
136	164	2102	1.30	10.86	24.0			
158	190	1816	1.50	9.38	22.5			
164	197	1752	2.60	9.05	21.9			
187	224	1535	1.80	7.93	21.0			
229	275	1252	2.20	6.47	19.3			
282	339	1016	2.70	5.25	17.8			
78	94	3657	0.85	18.89	**	**CG092-22P-200L-04E** **CF092-22P-200L-04E**	357 355	94
92	111	3113	1.00	16.08	22.1			
107	128	2685	1.15	13.87	24.3			
127	153	2251	1.35	11.63	22.4			
137	165	2085	0.90	10.77	**			
156	188	1831	1.55	9.46	20.5			
161	194	1775	1.05	9.17	20.5			
187	225	1531	1.20	7.91	19.2			
200	241	1433	1.85	7.40	18.4			
223	268	1283	1.45	6.63	17.8			
275	330	1043	1.75	5.39	16.3			
351	422	817	2.25	4.22	14.8			

Selection tables - Gear units

Structure of the selection tables

1	2	3	4	5	6								
Type	$i_{ges.}$	M_{2nenn}	n_2	i_{exakt}	IEC motor frame size								
		[Nm]	[min^{-1}]		63	71	80	90	100	112	132	160	180	200
C002	47.44	50	30	759/16										
2 stages 7	42.34	50	33	1863/44										
	36.85	50	38	737/20										
	32.89	50	43	1809/55										
n_1=1400 min^{-1} 8	29.33	50	48	88/3										
	26.18	50	53	288/11										
	23.00	50	61	23/1										
Maximum torque 50 Nm 9	20.53	50	68	2484/121										
	17.29	50	81	121/7										

1 Type of gear unit

2 Total ratio

3 Permissible output torque at S1 operation (f_B = 1.0)

4 Output speed (gear unit) at n_1 = 1400 min^{-1}

5 Exact mathematical ratio

6 Possible motor frame sizes

7 Number of gear stages

8 Motor speed

9 Maximum torque

C

Type	$i_{ges.}$	M_{2nenn} [Nm]	n_2 [min^{-1}]	i_{exakt}	IEC motor frame size 63	71	80	90	100	112	132	160	180	200
C002	47.44	50	30	759/16										
	42.34	50	33	1863/44										
	36.85	50	38	737/20										
	32.89	50	43	1809/55										
	29.33	50	48	88/3										
	26.18	50	53	288/11										
	23.00	50	61	23/1										
	20.53	50	68	2484/121										
	17.29	50	81	121/7										
2 stages	16.86	31	83	2967/176										
	15.43	50	91	108/7										
n_1=1400 min^{-1}	13.54	50	103	176/13										
	13.10	43	107	2881/220										
	12.08	50	116	1728/143										
Maximum torque 50 Nm	10.42	45	134	344/33										
	9.97	50	140	319/32										
	8.90	50	157	783/88										
	8.17	44	171	989/121										
	6.88	50	204	55/8										
	6.14	40	228	43/7										
	6.14	50	228	135/22										
	4.81	37	291	688/143										
	3.54	34	395	1247/352										
	2.44	30	573	215/88										
C012	66.50	85	21	133/2										
	59.59	85	23	1311/22										
	51.80	85	27	259/5										
	46.42	85	30	2553/55										
	42.00	85	33	42/1										
	37.64	85	37	414/11										
	33.09	85	42	364/11										
	29.65	85	47	3588/121										
	25.50	85	55	51/2										
	25.05	41	56	551/22										
	22.85	85	61	3519/154										
2 stages	19.92	85	70	259/13										
	19.51	66	72	1073/55										
n_1=1400 min^{-1}	17.85	85	78	2553/143										
	15.82	66	89	174/11										
	14.88	85	94	119/8										
Maximum torque 85 Nm	13.33	85	105	1173/88										
	12.46	66	112	1508/121										
	11.20	85	125	56/5										
	10.04	85	139	552/55										
	9.60	66	146	1479/154										
	8.22	85	170	189/23										
	7.50	66	187	1073/143										
	7.36	85	190	81/11										
	5.60	66	250	493/88										
	4.22	66	332	232/55										
	3.09	66	452	783/253										

Legend see page 69

Type	$i_{ges.}$	M_{2nenn} [Nm]	n_2 [min^{-1}]	i_{exakt}	IEC motor frame size									
					63	71	80	90	100	112	132	160	180	200
C032	42.88	184	33	2573/60										
2 stages n_1=1400 min^{-1} Maximum torque 200 Nm	38.95	168	36	5063/130										
	34.88	200	40	279/8										
	31.67	200	44	1647/52										
	27.71	200	51	1829/66										
	25.17	200	56	3599/143										
	24.03	103	58	913/38										
	21.40	200	65	899/42										
	19.54	128	72	1485/76										
	19.44	200	72	1769/91										
	17.09	200	82	1333/78										
	15.53	130	90	295/19										
	15.52	200	90	2623/169										
	12.92	200	108	155/12										
	11.99	130	117	1595/133										
	11.73	200	119	305/26										
	9.82	200	143	589/60										
	9.57	130	146	2365/247										
	8.92	198	157	1159/130										
	7.64	194	183	527/69										
	7.24	130	193	275/38										
	6.94	191	202	2074/299										
	5.96	187	235	155/26										
	5.50	130	255	11/2										
	5.41	185	259	915/169										
	4.28	127	327	1870/437										
	3.34	118	419	825/247										
C033	286.32	200	4.9	20615/72										
3 stages n_1=1400 min^{-1} Maximum torque 200 Nm	260.03	200	5.4	40565/156										
	223.03	200	6.3	8029/36										
	202.55	200	6.9	15799/78										
	180.83	200	7.7	1085/6										
	164.23	200	8.5	2135/13										
	142.47	200	9.8	14105/99										
	129.39	200	11	4270/33										
	109.79	200	13	2635/24										
	99.71	200	14	5185/52										
	85.78	200	16	40145/468										
	77.90	200	18	78995/1014										
	64.05	200	22	18445/288										
	58.17	200	24	36295/624										
	48.22	200	29	434/9										
	43.79	200	32	1708/39										
	35.38	200	40	3255/92										
	32.13	200	44	19215/598										

Legend see page 69

C

Type	$i_{ges.}$	M_{2nenn} [Nm]	n_2 [min^{-1}]	i_{exakt}	IEC motor frame size 63	71	80	90	100	112	132	160	180	200
C052	58.85	250	24	1177/20										
2 stages n_1=1400 min^{-1} Maximum torque 400 Nm	53.50	227	26	107/2										
	48.13	337	29	385/8										
	43.75	307	32	175/4										
	38.00	400	37	38/1										
	35.67	151	39	107/3										
	34.55	400	41	380/11										
	29.46	400	48	825/28										
	29.17	204	48	175/6										
	26.79	400	52	375/14										
	24.12	400	58	627/26										
	23.03	267	61	760/33										
	21.92	400	64	285/13										
	18.56	400	75	297/16										
	17.86	267	78	125/7										
	16.88	400	83	135/8										
	14.62	267	96	190/13										
	14.03	400	100	561/40										
	12.75	400	110	51/4										
	11.48	400	122	264/23										
	11.25	267	124	45/4										
	10.43	400	134	240/23										
	9.31	386	150	121/13										
	8.50	267	165	17/2										
	8.46	365	165	110/13										
	7.79	347	180	187/24										
	7.08	328	198	85/12										
	6.96	267	201	160/23										
	6.31	306	222	341/54										
	6.09	299	230	341/56										
	5.74	289	244	155/27										
	5.64	259	248	220/39										
	5.54	283	253	155/28										
	4.72	230	296	85/18										
	3.83	200	366	310/81										
	3.69	195	379	155/42										
C053	328.43	400	4.3	2299/7										
3 stages n_1=1400 min^{-1} Maximum torque 400 Nm	298.57	400	4.7	2090/7										
	267.93	400	5.2	3751/14										
	243.57	400	5.7	1705/7										
	213.71	400	6.6	1496/7										
	194.29	400	7.2	1360/7										
	165.45	400	8.5	8107/49										
	150.41	400	9.3	7370/49										
	132.97	400	11	12100/91										
	120.88	400	12	11000/91										
	101.55	400	14	5687/56										
	92.32	400	15	2585/28										
	77.79	400	18	1089/14										
	70.71	400	20	495/7										
	61.63	400	23	9922/161										
	56.02	400	25	9020/161										
	49.20	400	28	4477/91										
	44.73	400	31	4070/91										

Legend see page 69

Type	$i_{ges.}$	M_{2nenn} [Nm]	n_2 [min^{-1}]	i_{exakt}	IEC motor frame size 63	71	80	90	100	112	132	160	180	200
C062	60.00	420	23	60/1	■	■	■	■						
	55.02	385	25	3081/56	■	■	■	■						
	47.55	600	29	6800/143	■	■	■	■						
	43.60	563	32	6715/154	■	■	■	■						
	36.92	600	38	480/13	■	■	■	■						
	33.86	600	41	237/7	■	■	■	■						
	33.43	234	42	234/7	■	■	■	■						
	30.30	600	46	5120/169	■	■	■	■	■	■	■			
	27.78	600	50	2528/91	■	■	■	■	■	■	■			
	26.49	342	53	2040/77	■	■	■	■						
	23.46	600	60	305/13	■	■	■	■	■	■	■			
	21.51	600	65	4819/224	■	■	■	■	■	■	■			
	20.57	377	68	144/7	■	■	■	■						
	17.85	600	78	232/13	■	■	■	■	■	■	■			
	16.88	377	83	1536/91	■	■	■	■	■	■	■			
2 stages	16.36	600	86	2291/140	■	■	■	■	■	■	■			
	14.72	600	95	4400/299	■	■	■	■	■	■	■			
	13.49	600	104	4345/322	■	■	■	■	■	■	■			
n_1=1400 min^{-1}	13.07	377	107	183/14	■	■	■	■	■	■	■			
	12.07	600	116	2040/169			■	■	■	■	■			
Maximum torque	11.07	600	126	4029/364			■	■	■	■	■			
600 Nm	10.26	600	137	400/39			■	■	■	■	■			
	9.94	377	141	348/35	■	■	■	■	■	■	■			
	9.40	589	149	395/42			■	■	■	■	■			
	8.43	547	166	2960/351			■	■	■	■	■			
	8.20	377	171	1320/161	■	■	■	■	■	■	■			
	8.13	534	172	740/91					■	■	■			
	7.73	517	181	2923/378			■	■	■	■	■			
	7.46	504	188	2923/392					■	■	■			
	6.73	377	208	612/91			■	■	■	■	■			
	6.69	469	209	2000/299			■	■	■	■	■			
	6.13	443	228	1975/322			■	■	■	■	■			
	5.71	371	245	40/7			■	■	■	■	■			
	4.70	325	298	296/63			■	■	■	■	■			
	4.53	318	309	222/49					■	■	■			
	3.73	279	376	600/161			■	■	■	■	■			
C063	375.71	600	3.7	83032/221	■	■	■	■						
	344.51	600	4.1	819941/2380	■	■	■	■						
	307.24	600	4.6	67900/221	■	■	■	■						
	281.73	600	5.0	38315/136	■	■	■	■						
	242.60	600	5.8	589760/2431	■	■	■	■						
	222.46	600	6.3	291194/1309	■	■	■	■						
	188.11	600	7.4	291000/1547	■	■	■	■						
	172.49	600	8.1	574725/3332	■	■	■	■						
3 stages	153.96	600	9.1	442320/2873	■	■	■	■						
	141.17	600	9.9	436791/3094	■	■	■	■						
	118.51	600	12	26190/221	■	■	■	■						
n_1=1400 min^{-1}	108.67	600	13	206901/1904	■	■	■	■						
	89.54	600	16	1164/13	■	■	■	■						
Maximum torque	82.10	600	17	22989/280	■	■	■	■						
600 Nm	73.28	600	19	372480/5083	■	■	■	■						
	67.19	600	21	183912/2737	■	■	■	■						
	59.42	600	24	170720/2873			■	■	■	■				
	54.49	600	26	84293/1547			■	■	■	■				
	49.74	600	28	1940/39			■	■	■	■				
	45.61	600	31	7663/168			■	■	■	■				
	40.32	600	35	240560/5967			■	■						
	36.97	600	38	237553/6426			■	■						

Legend see page 69

Type	$i_{ges.}$	M_{2nenn} [Nm]	n_2 [min^{-1}]	i_{exakt}	IEC motor frame size 63	71	80	90	100	112	132	160	180	200
C072	38.92	820	36	506/13										
2 stages n_1=1400 min^{-1} Maximum torque 820 Nm	35.41	820	40	5984/169										
	30.55	820	46	1955/64										
	27.79	820	50	1445/52										
	23.58	820	59	943/40										
	21.45	820	65	1394/65										
	20.65	686	68	1342/65										
	19.50	809	72	39/2										
	17.74	795	79	408/23										
	16.59	767	84	1725/104										
	16.20	686	86	1037/64										
	15.09	753	93	2550/169										
	14.38	731	97	115/8										
	13.08	718	107	170/13										
	12.51	662	112	2501/200										
	12.14	691	115	437/36										
	11.71	683	120	1311/112										
	11.04	679	127	1292/117										
	10.65	671	131	969/91										
	10.34	624	135	2379/230										
	10.00	648	140	10/1										
	9.10	636	154	2720/299										
	8.80	594	159	915/104										
	7.63	568	184	61/8										
	6.44	539	217	1159/180										
	6.21	533	225	3477/560										
	5.30	508	264	122/23										
C073	351.33	820	4.0	14053/40										
3 stages n_1=1400 min^{-1} Maximum torque 820 Nm	319.60	820	4.4	1598/5										
	278.44	820	5.0	18377/66										
	253.30	820	5.5	108664/429										
	216.20	820	6.5	1081/5										
	196.68	820	7.1	12784/65										
	177.39	820	7.9	34592/195										
	161.38	820	8.7	409088/2535										
	137.38	820	10	65941/480										
	124.97	820	11	48739/390										
	104.50	820	13	31349/300										
	95.06	820	15	92684/975										
	86.17	820	16	517/6										
	78.39	820	18	70312/897										
	70.68	820	20	18377/260										
	64.30	820	22	54332/845										
	60.06	820	23	1081/18										
	54.63	820	26	6392/117										
	49.38	820	28	39997/810										
	47.62	819	29	39997/840										
	44.92	794	31	236504/5265										
	43.32	782	32	59126/1365										
	39.17	765	36	235/6										
	35.63	726	39	31960/897										

Legend see page 69

Type	$i_{ges.}$	M_{2nenn}	n_2	i_{exakt}	IEC motor frame size									
		[Nm]	[min⁻¹]		63	71	80	90	100	112	132	160	180	200
C082	54.18	1550	26	4930/91	■	■	■	■	■	■	■			
2 stages n_1=1400 min⁻¹ Maximum torque 1550 Nm	42.88	1550	33	9605/224	■	■	■	■	■	■	■			
	37.44	1550	37	3145/84			■	■	■	■	■			
	33.09	1550	42	1853/56	■	■	■	■	■	■	■			
	31.23	1117	45	406/13	■	■	■	■	■	■	■			
	27.98	1549	50	4505/161	■	■	■	■	■	■	■			
	24.72	1120	57	791/32	■	■	■	■	■	■	■			
	24.05	1479	58	8755/364			■	■	■	■	■			
	21.58	1316	65	259/12			■	■	■	■	■			
	21.00	1418	67	7055/336			■	■	■	■	■	■		
	19.08	1306	73	763/40	■	■	■	■	■	■	■			
	17.99	1353	78	3400/189			■	■	■	■	■	■	■	
	17.35	1338	81	850/49					■	■	■			
	16.13	1298	87	371/23	■	■	■	■	■	■	■			
	15.31	1288	91	2465/161			■	■	■	■	■	■	■	
	13.87	1233	101	721/52			■	■	■	■	■			
	12.84	1220	109	4675/364					■	■	■	■	■	
	12.10	1177	116	581/48			■	■	■	■	■	■		
	10.82	1158	129	3485/322					■	■	■	■	■	
	10.37	1117	135	280/27			■	■	■	■	■	■	■	
	10.00	1103	140	10/1					■	■	■			
	8.87	1090	158	1615/182								■	■	
	8.83	1057	159	203/23			■	■	■	■	■	■	■	
	7.40	996	189	385/52					■	■	■	■	■	
	6.24	939	224	287/46					■	■	■	■	■	
	5.12	878	274	133/26								■	■	
C083	368.94	1550	3.8	909075/2464	■	■	■	■						
3 stages n_1=1400 min⁻¹ Maximum torque 1550 Nm	284.84	1550	4.9	893265/3136	■	■	■	■						
	238.89	1550	5.9	86955/364	■	■	■	■	■	■	■			
	187.48	1550	7.5	671925/3584	■	■	■	■	■	■	■			
	144.69	1550	9.7	64821/448	■	■	■	■	■	■	■			
	119.68	1550	12	308295/2576	■	■	■	■	■	■	■			
	101.80	1550	14	592875/5824			■	■	■	■	■			
	88.23	1550	16	39525/448			■	■	■	■	■			
	74.50	1550	19	50065/672			■	■	■	■	■			
	71.84	1550	19	450585/6272					■	■	■			
	61.37	1550	23	39525/644			■	■	■	■	■			

Legend see page 69

Type	$i_{ges.}$	M_{2nenn} [Nm]	n_2 [min^{-1}]	i_{exakt}	IEC motor frame size 63	71	80	90	100	112	132	160	180	200
C092	39.60	2970	35	198/5	■	■	■	■	■	■	■			
2 stages n_1=1400 min^{-1} Maximum torque 3000 Nm	33.48	2992	42	770/23	■	■	■	■	■	■	■			
	28.98	2981	48	1507/52			■	■	■	■	■			
	25.67	3000	55	77/3			■	■	■	■	■	■		
	22.58	1694	62	1242/55	■	■	■	■	■	■	■			
	22.20	3000	63	1199/54			■	■	■	■	■	■	■	
	21.41	2569	65	1199/56					■	■	■			
	19.09	1706	73	210/11	■	■	■	■	■	■	■			
	18.89	3000	74	869/46			■	■	■	■	■	■	■	■
	16.53	1700	85	9453/572			■	■	■	■	■			
	16.08	3000	87	209/13					■	■	■	■	■	■
	14.64	1819	96	161/11			■	■	■	■	■	■		
	13.87	3000	101	319/23					■	■	■	■	■	■
	12.66	1819	111	2507/198			■	■	■	■	■	■	■	
	12.21	1465	115	7521/616					■	■	■			
	11.63	2990	120	605/52								■	■	■
	10.77	1819	130	237/22			■	■	■	■	■	■	■	■
	9.46	2805	148	473/50								■	■	■
	9.17	1819	153	1311/143					■	■	■	■	■	■
	7.91	1819	177	87/11					■	■	■	■	■	■
	7.40	2600	189	429/58								■	■	■
	6.63	1819	211	345/52								■	■	■
	5.39	1819	260	2967/550								■	■	■
	4.22	1819	332	2691/638								■	■	■
C093	306.73	3000	4.6	7975/26	■	■	■	■	■	■	■			
3 stages n_1=1400 min^{-1} Maximum torque 3000 Nm	242.77	3000	5.8	31075/128	■	■	■	■	■	■	■			
	211.98	3000	6.6	10175/48			■	■	■	■	■			
	187.34	3000	7.5	5995/32	■	■	■	■	■	■	■			
	158.42	3000	8.8	14575/92	■	■	■	■	■	■	■			
	154.24	3000	9.1	14036/91	■	■	■	■	■	■	■			
	136.18	3000	10	28325/208			■	■	■	■	■			
	122.08	3000	11	13673/112	■	■	■	■	■	■	■			
	118.88	3000	12	22825/192			■	■	■	■	■	■		
	106.60	3000	13	4477/42			■	■	■	■	■			
	101.85	3000	14	2750/27			■	■	■	■	■	■		
	98.21	3000	14	1375/14					■	■	■			
	94.21	3000	15	13189/140	■	■	■	■	■	■	■			
	86.68	3000	16	7975/92			■	■	■	■	■	■		
	79.66	3000	18	12826/161	■	■	■	■	■	■	■			
	72.72	3000	19	15125/208					■	■	■	■		
	68.48	3000	20	12463/182			■	■	■	■	■			
	61.28	3000	23	11275/184					■	■	■	■		
	59.78	3000	23	10043/168			■	■	■	■	■	■		
	51.22	3000	27	9680/189			■	■	■	■	■	■		
	50.24	3000	28	5225/104								■		
	49.39	3000	28	2420/49					■	■	■			
	43.59	3000	32	7018/161			■	■	■	■	■	■		
	36.57	3000	38	6655/182					■	■	■	■		
	30.81	2850	45	4961/161					■	■	■	■		
	25.26	2645	55	2299/91								■		

Legend see page 69

Type	$i_{ges.}$	M_{2nenn} [Nm]	n_2 [min^{-1}]	i_{exakt}	IEC motor frame size 63	71	80	90	100	112	132	160	180	200
C102	33.01	3695	42	6437/195										
2 stages n_1=1400 min^{-1} Maximum torque 4500 Nm	29.16	4500	48	1312/45										
	25.31	4500	55	2050/81										
	24.40	2930	57	1025/42										
	21.87	4500	64	328/15										
	19.17	2146	73	11461/598										
	18.71	4500	75	3649/195										
	16.93	2698	83	1168/69										
	16.16	4500	87	5576/345										
	14.69	2698	95	9125/621										
	14.17	1701	99	9125/644										
	13.67	4500	102	41/3										
	12.70	2698	110	292/23										
	11.15	4500	126	1394/125										
	10.86	2698	129	6497/598										
	9.38	2698	149	4964/529										
	9.05	4500	155	1312/145										
	7.93	2698	176	365/46										
	7.22	4500	194	1517/210										
	6.47	2698	216	3723/575										
	5.25	2698	266	3504/667										
	4.19	2698	334	2701/644										
C103	246.43	4500	5.7	141696/575										
3 stages n_1=1400 min^{-1} Maximum torque 4500 Nm	208.33	4500	6.7	110208/529										
	180.35	4500	7.8	269616/1495										
	159.72	4500	8.8	18368/115										
	138.17	4500	10	143008/1035										
	133.24	4500	11	107256/805										
	122.02	4500	11	15252/125										
	117.56	4500	12	310944/2645										
	103.15	4500	14	35588/345										
	100.05	4500	14	149568/1495										
	89.30	4500	16	174127/1950										
	86.31	4500	16	228288/2645										
	79.08	4500	18	17794/225										
	72.40	4500	19	21648/299										
	68.41	4500	20	138539/2025										
	65.97	4500	21	138539/2100										
	58.87	4500	24	169248/2875										
	58.21	4500	24	100409/1725										
	49.54	4500	28	48298/975										
	46.03	4500	30	153504/3335										
	42.74	4500	33	73718/1725										
	35.85	4500	39	13981/390										
	29.15	4500	48	54653/1875										
	22.79	4500	61	16523/725										

Legend see page 69

C

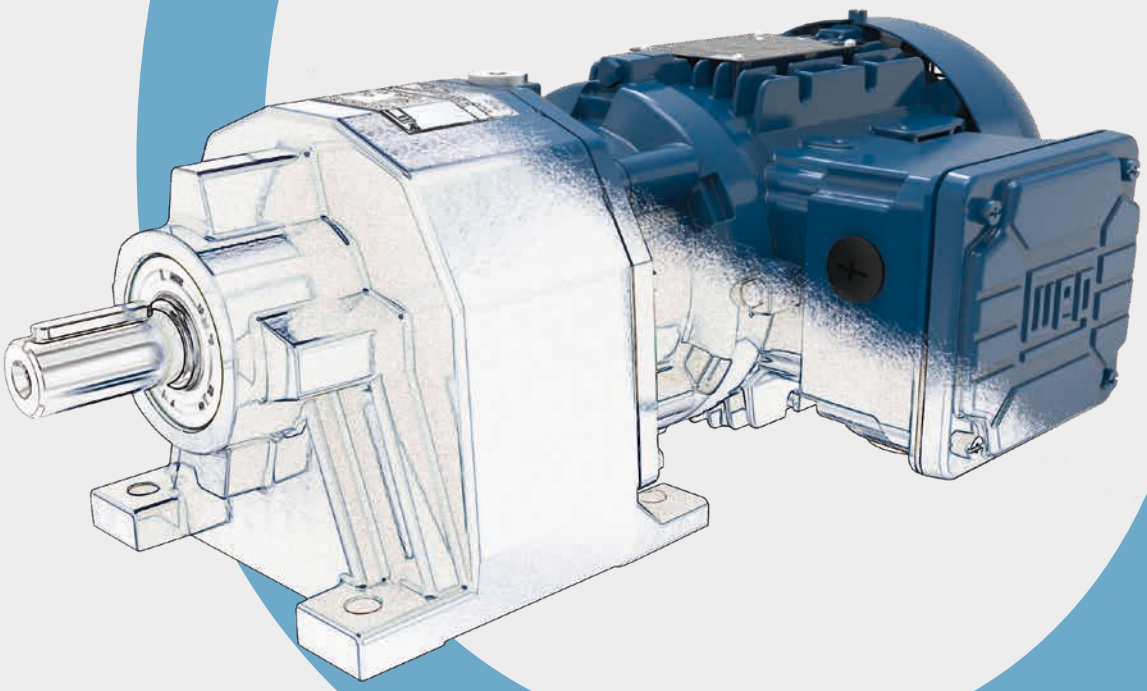

CG00 - Foot mounted

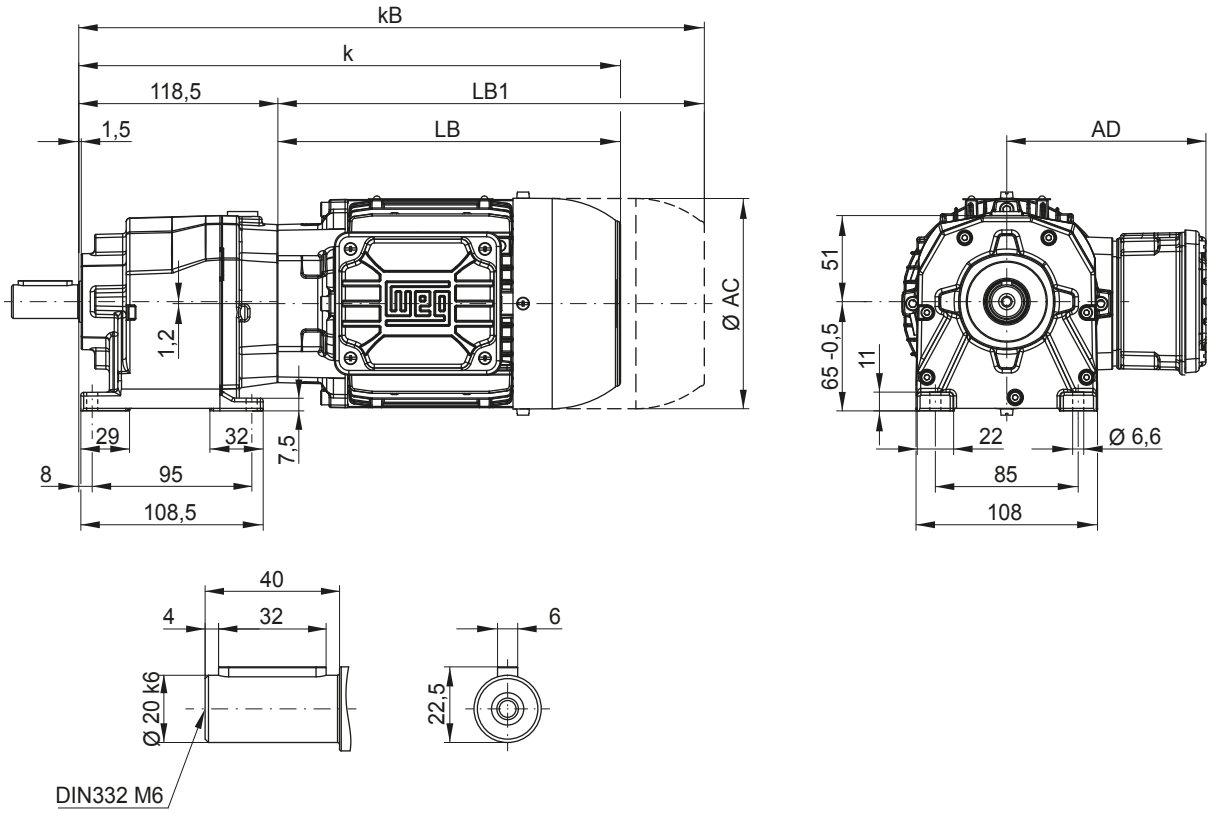

CW00 - Foot mounted with B14 flange execution + centring and threaded hole

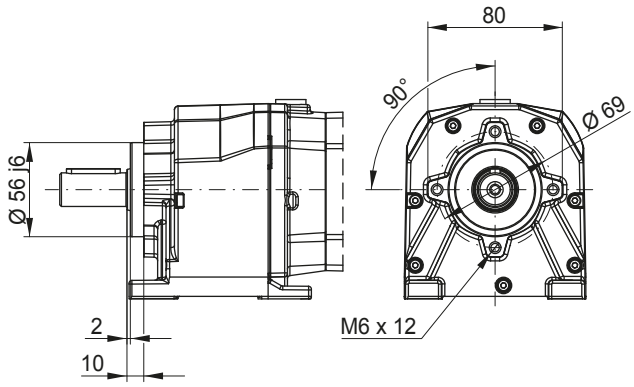

CC00 - B14 flange execution + centring and threaded hole

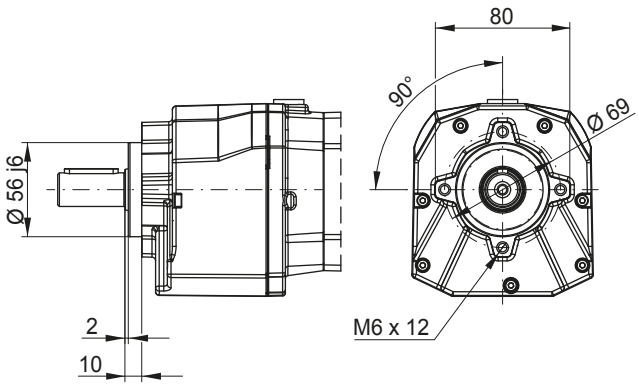

Motor fr. / Dimension	63	71	80
AC	126	141	159
AD	128	136	145
k	323	357	365
kB	367	406	423
LB	204	238	246
LB1	248	287	304

Motor dimension sheets see page 266
Description of motor lengths LB and LB1 see page 270

CF00 - Flange execution

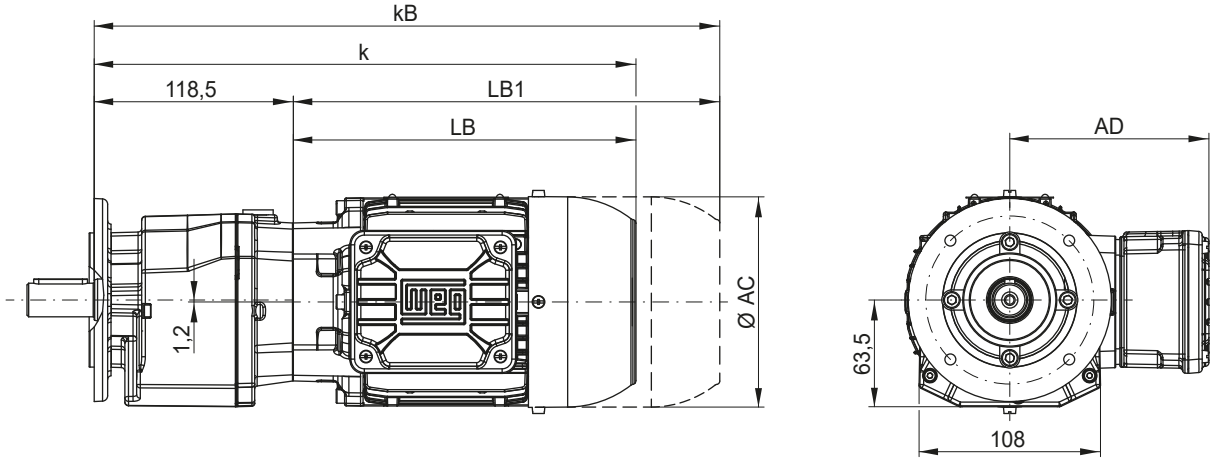

Flange Ø 120

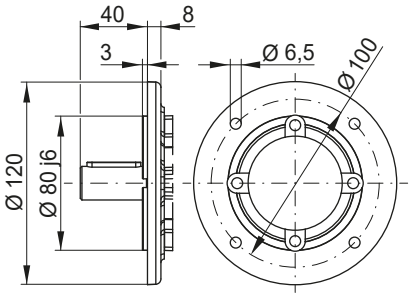

Flange Ø 140

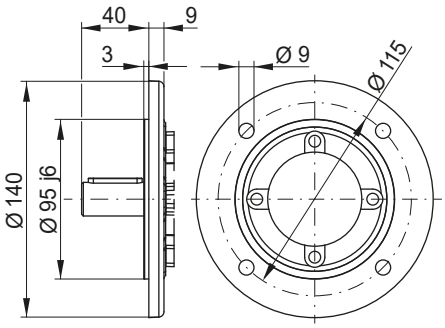

Flange Ø 160

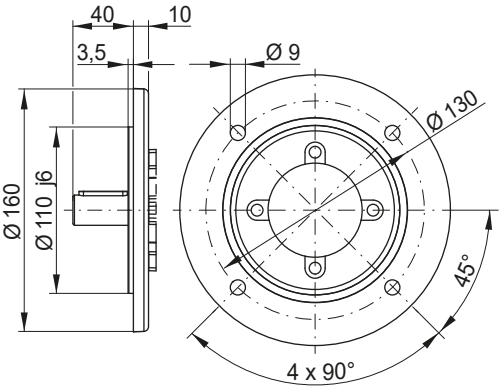

CA00 - Foot mounted and B5 flange execution

mountable flange sizes on the housing: Ø 120

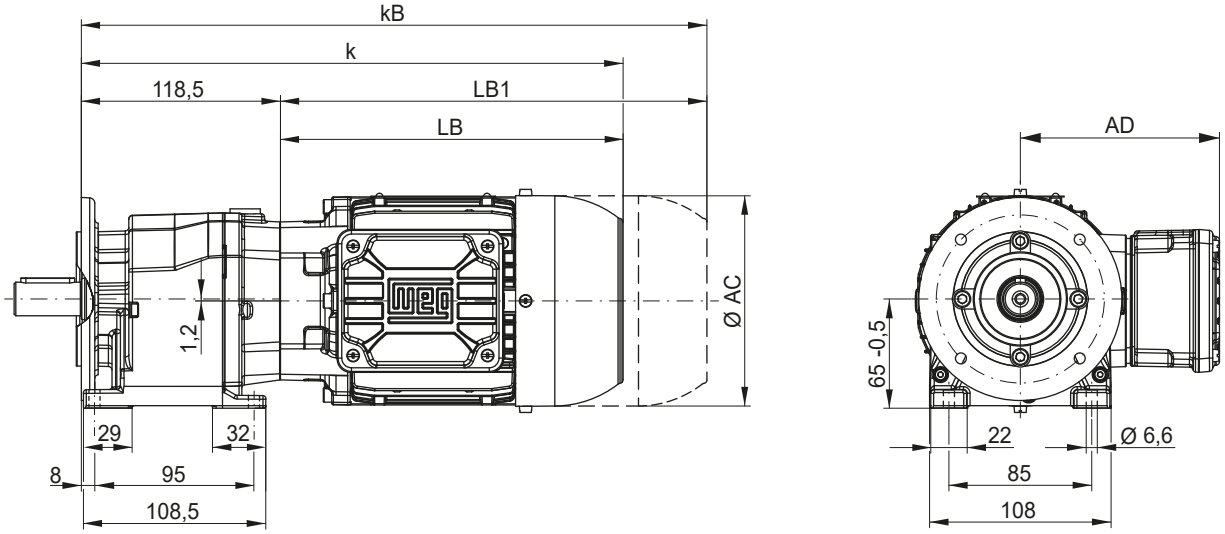

Dimensions in mm.

CG01 - Foot mounted

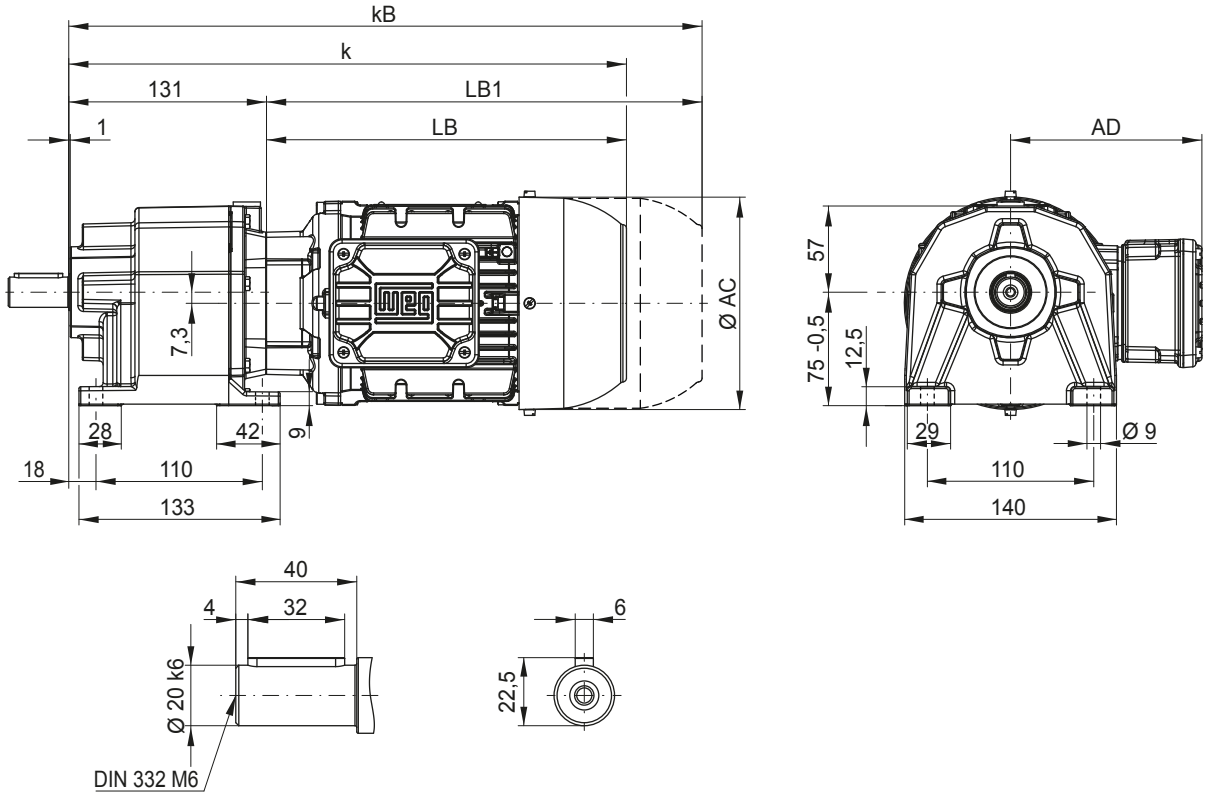

CW01 - Foot mounted with B14 flange execution + centring and threaded hole

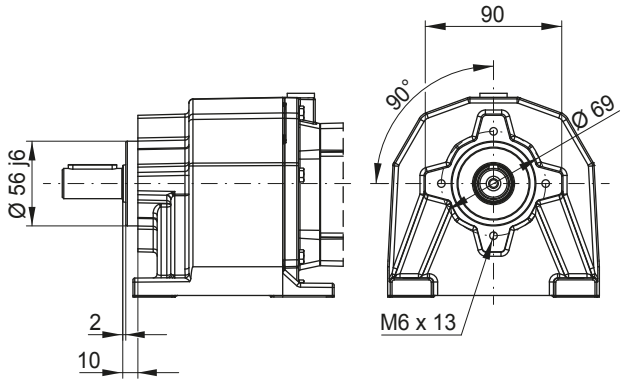

CC01 - B14 flange execution + centring and threaded hole

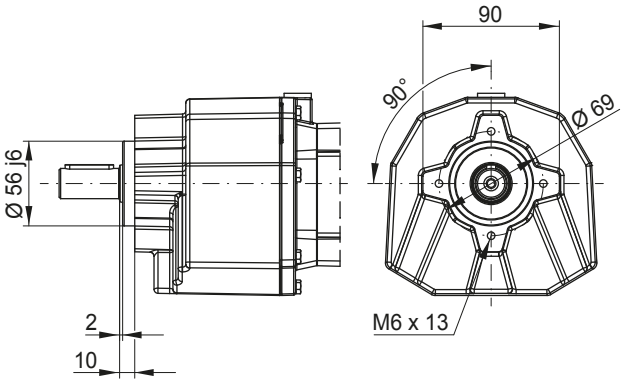

Motor fr. / Dimension	63	71	80	90S/L
AC	126	141	159	178
AD	128	136	145	155
k	335	369	377	419
kB	379	418	435	492
LB	204	238	246	288
LB1	248	287	304	361

Motor dimension sheets see page 266
Description of motor lengths LB and LB1 see page 270

CF01 - Flange execution

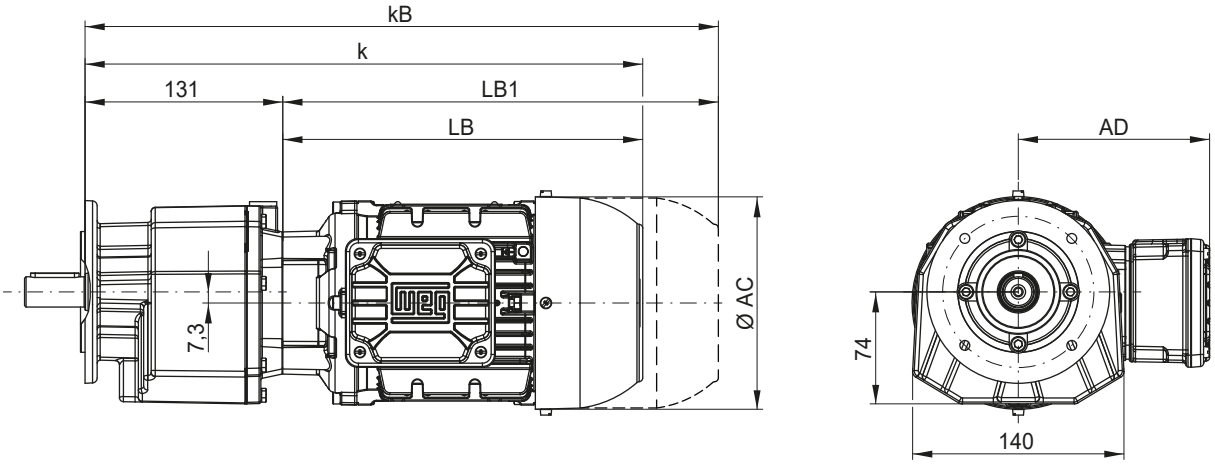

Flange Ø 120

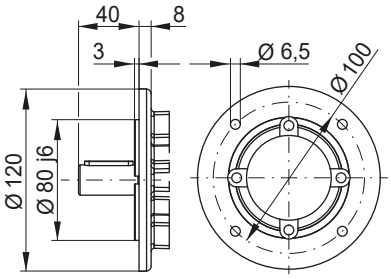

Flange Ø 140

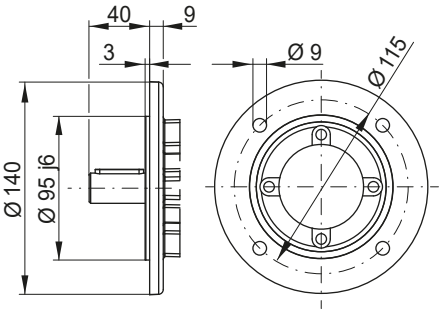

Flange Ø 160

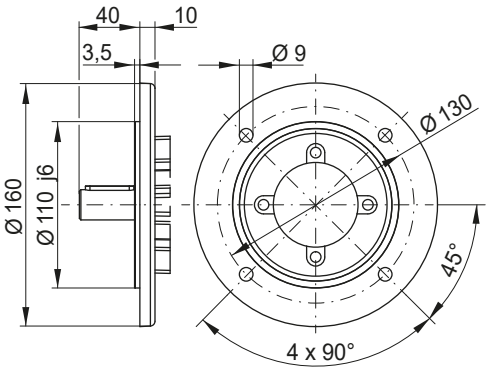

CA01 - Foot mounted and B5 flange execution

mountable flange sizes on the housing: Ø 120 and Ø 140

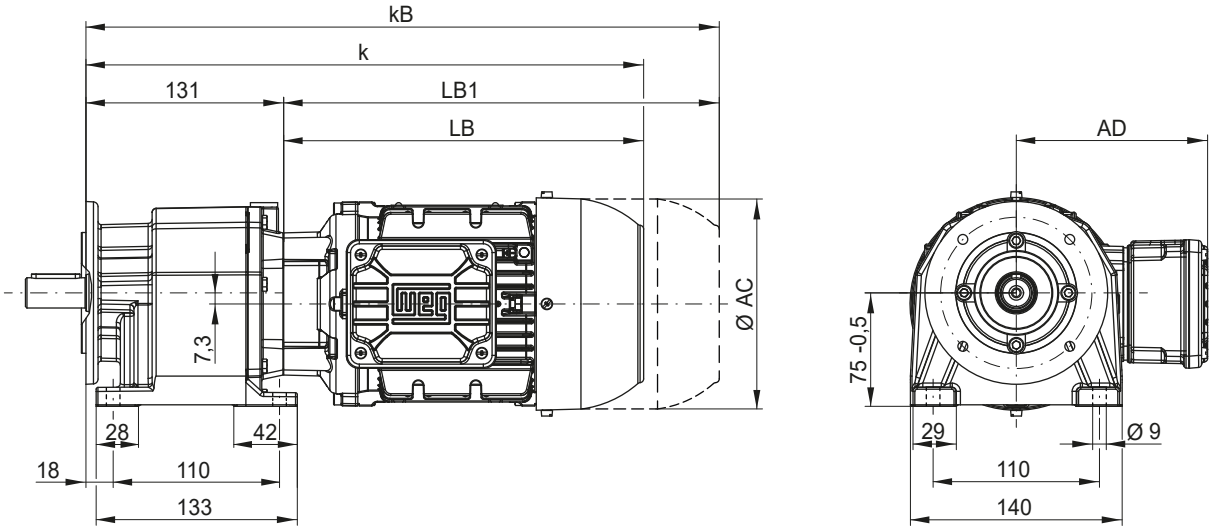

Dimensions in mm.

CG03 - Foot mounted

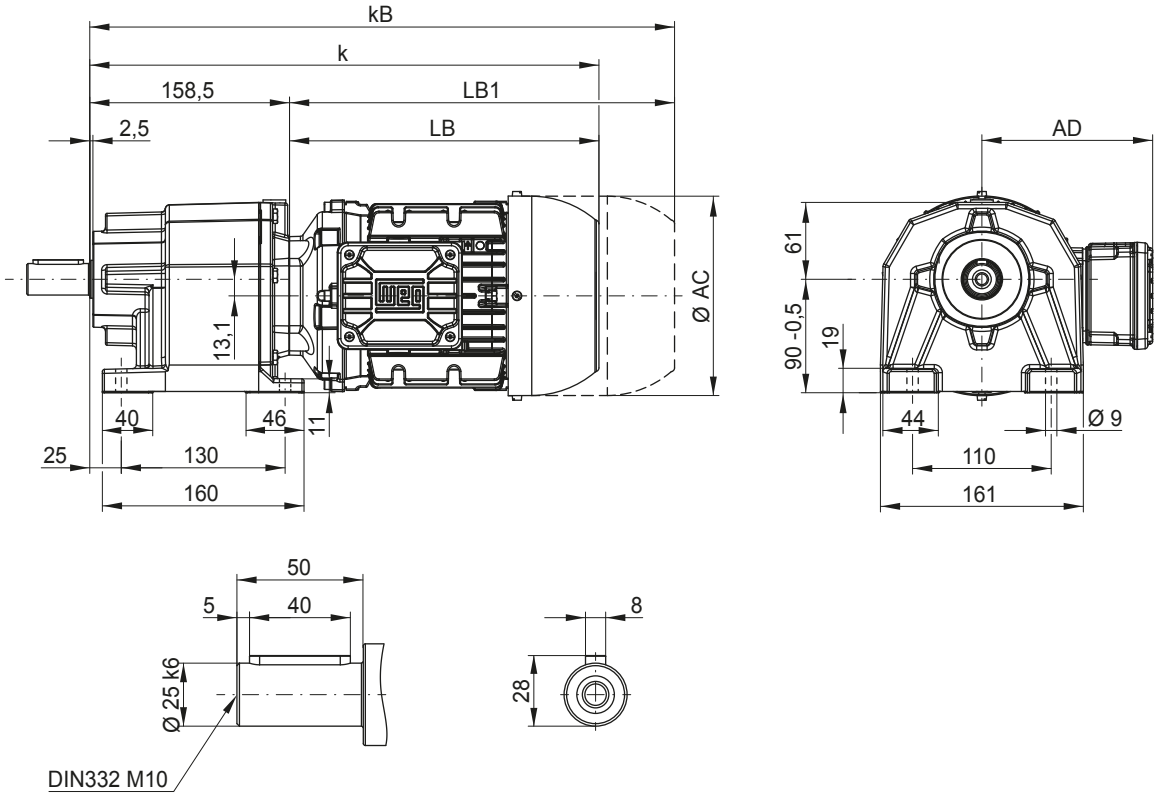

CW03 - Foot mounted with B14 flange execution + centring and threaded hole

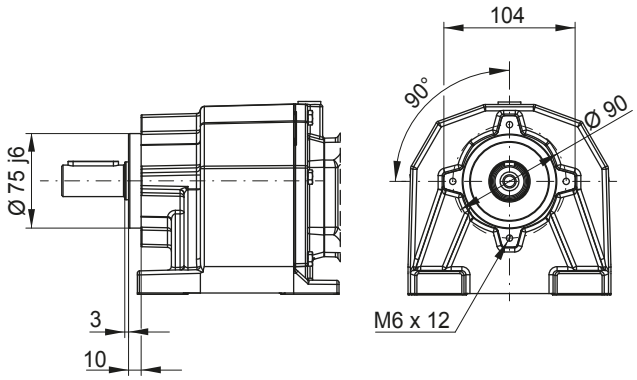

CC03 - B14 flange execution + centring and threaded hole

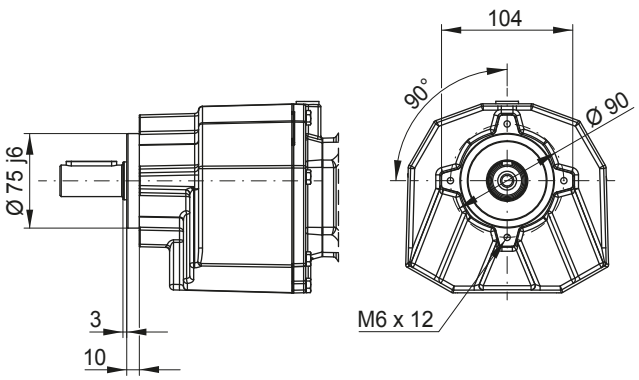

Motor fr. / Dimension	63	71	80	90S/L	100L	L100L
AC	126	141	159	178	199	199
AD	128	136	145	155	165	165
k	363	397	405	447	497	535
kB	407	446	463	520	581	619
LB	204	238	246	288	338	376
LB1	248	287	304	361	422	460

Motor dimension sheets see page 266
Description of motor lengths LB and LB1 see page 270

CF03 - Flange execution

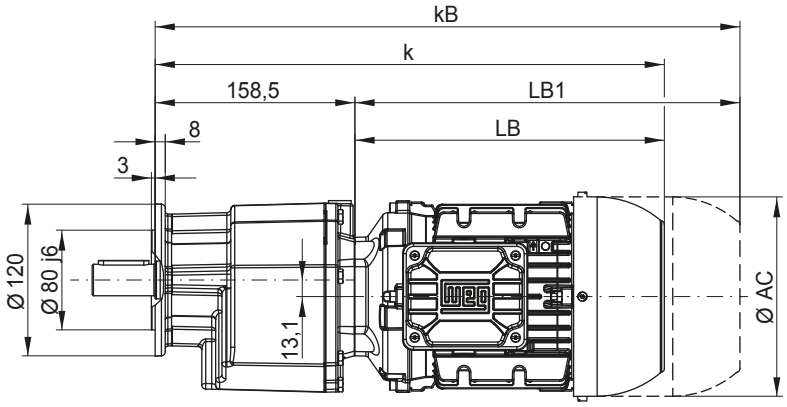

Flange Ø 120

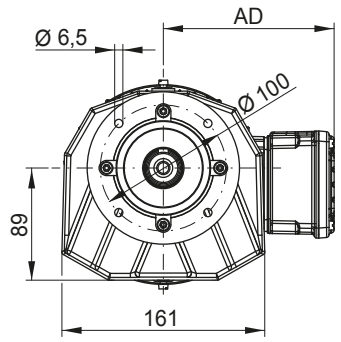

Flange Ø 140

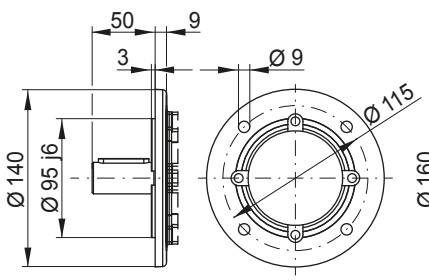

Flange Ø 160

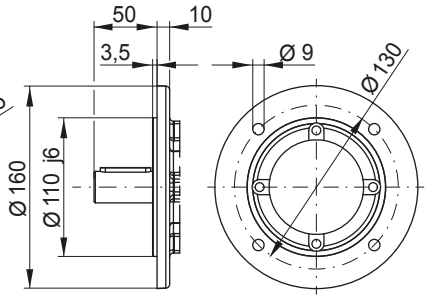

Flange Ø 200

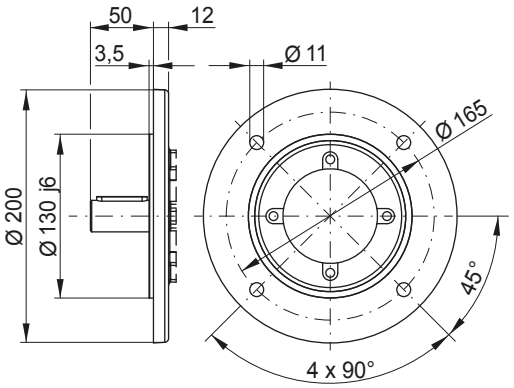

CA03 - Foot mounted and B5 flange execution

mountable flange sizes on the housing: Ø 120, Ø 140 and Ø 160

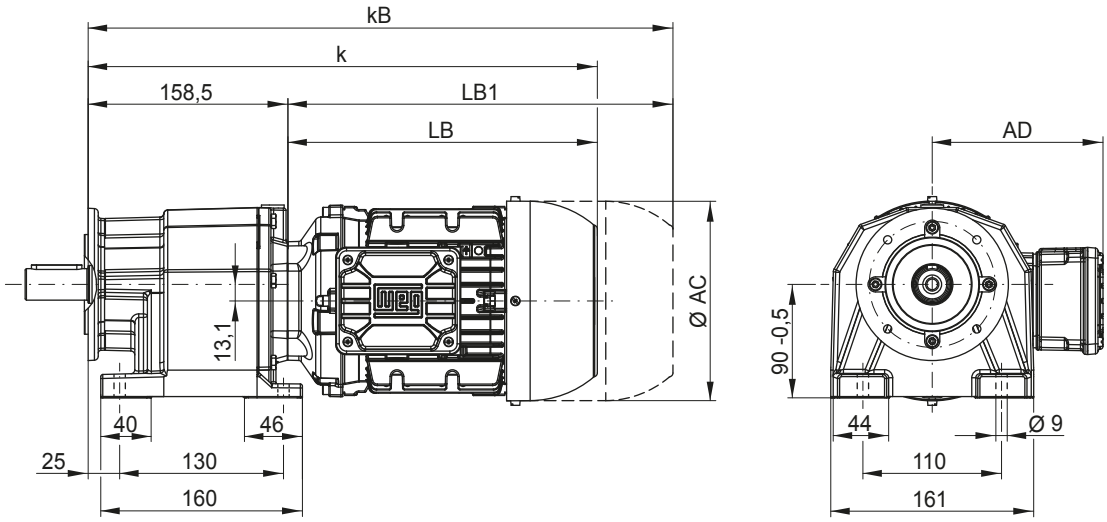

Dimensions in mm.

CG05 - Foot mounted

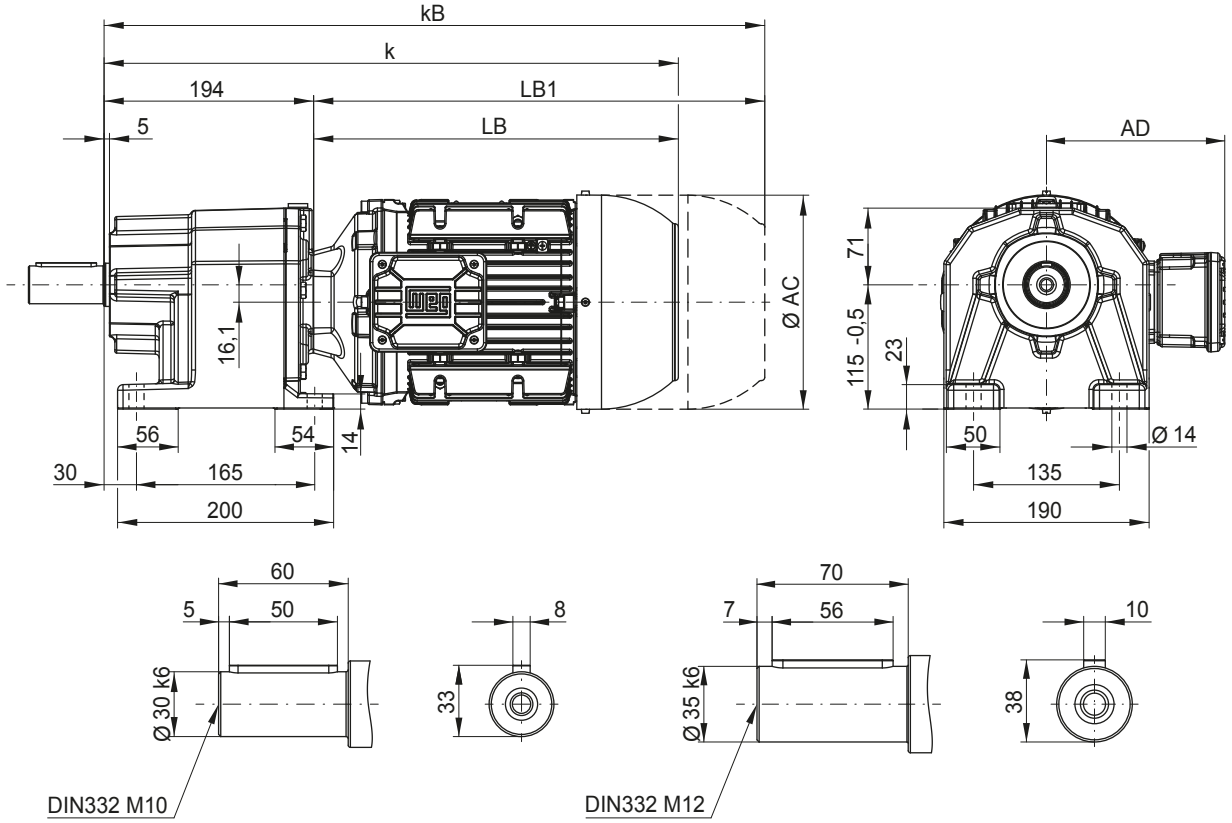

CW05 - Foot mounted with B14 flange execution + centring and threaded hole

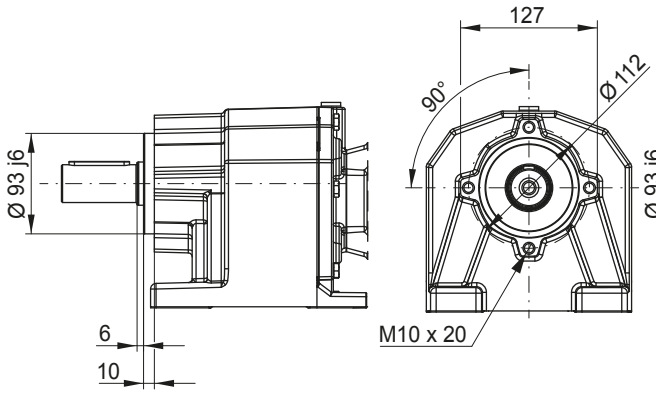

CC05 - B14 flange execution + centring and threaded hole

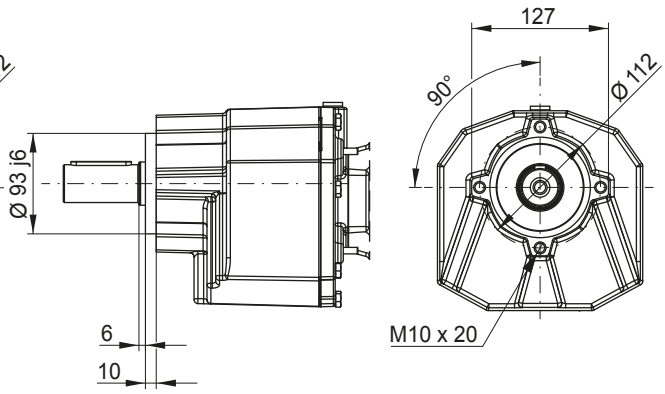

Motor fr. / Dimension	63	71	80	90S/L	100L	L100L	112M	132S,M	L132M
AC	126	141	159	178	199	199	221	261	261
AD	128	136	145	155	165	165	185	205	205
k	398	432	440	482	532	570	542	607	645
kB	442	481	498	555	616	654	629	725	763
LB	204	238	246	288	338	376	348	413	451
LB1	248	287	304	361	422	460	435	531	569

Motor dimension sheets see page 266
Description of motor lengths LB and LB1 see page 270

CF05 - Flange execution

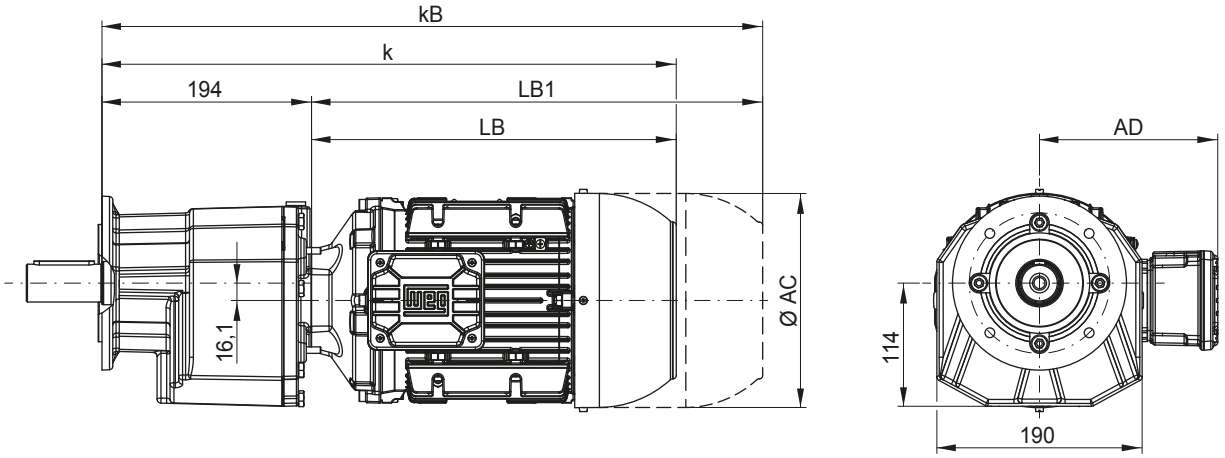

Flange Ø 160

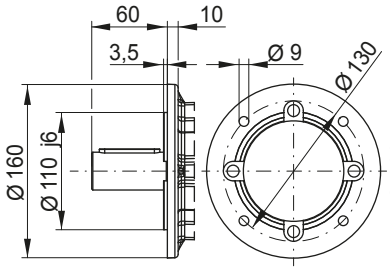

Flange Ø 200

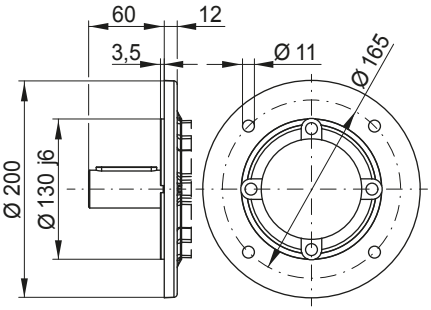

Flange Ø 250

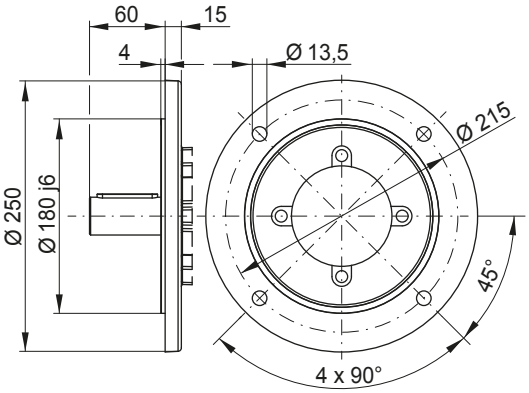

CA05 - Foot mounted and B5 flange execution

mountable flange sizes on the housing: Ø 160 and Ø 200

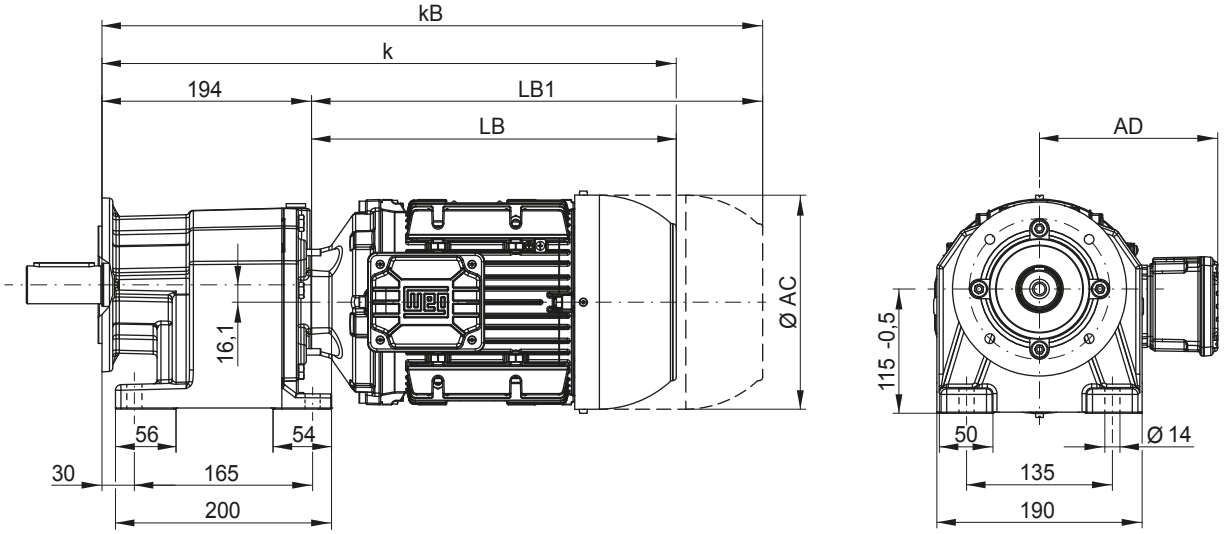

Dimensions in mm.

CG06 - Foot mounted

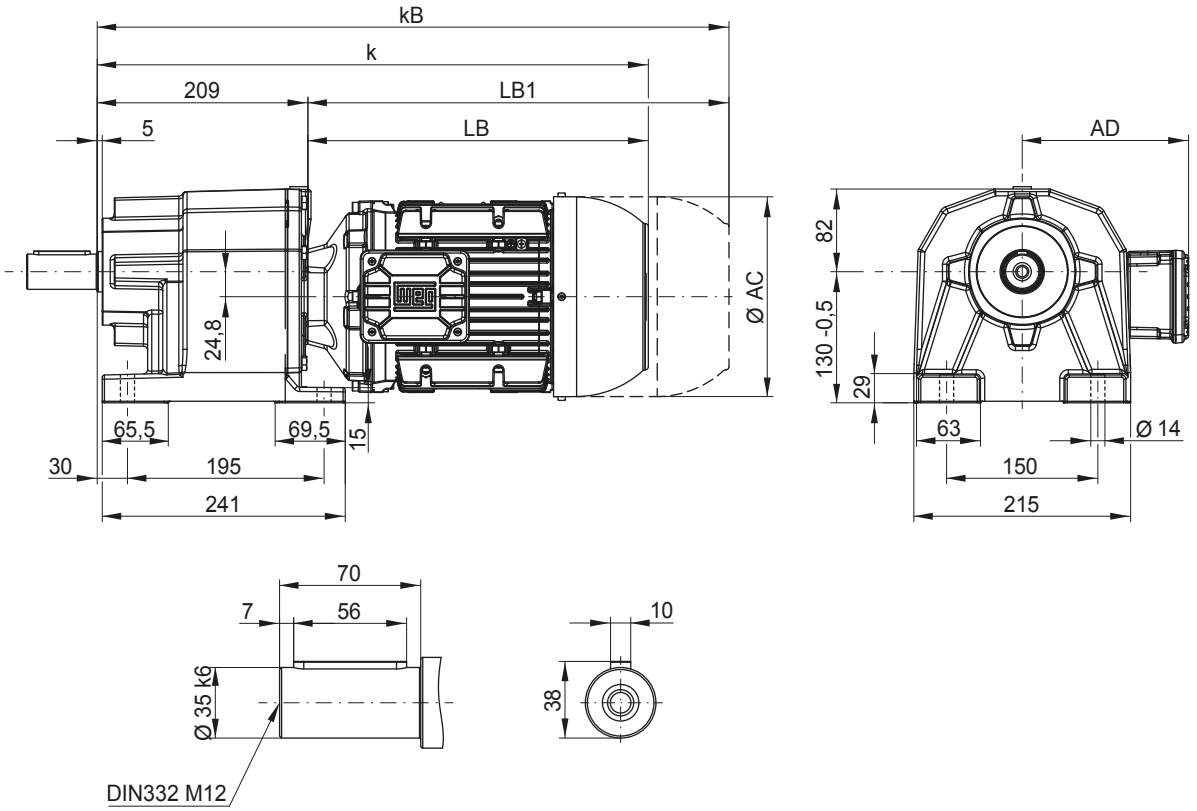

CW06 - Foot mounted with B14 flange execution + centring and threaded hole

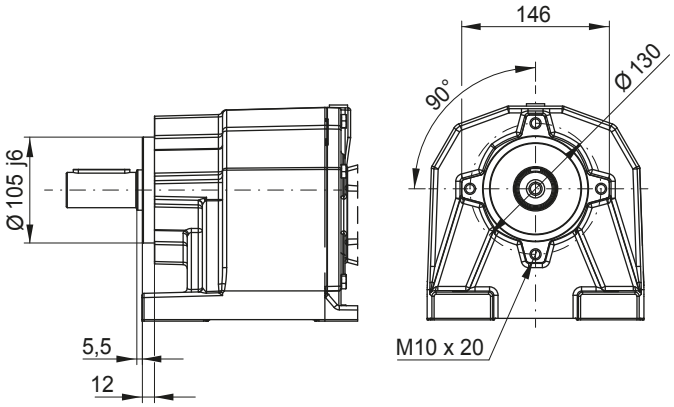

CC06 - B14 flange execution + centring and threaded hole

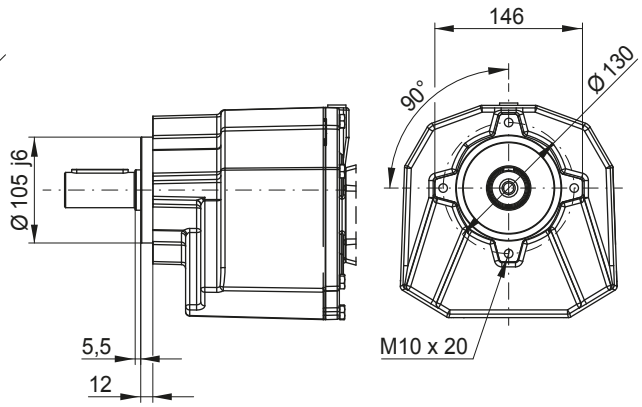

Motor fr. / Dimension	63	71	80	90S/L	100L	L100L	112M	132S,M	L132M
AC	126	141	159	178	199	199	221	261	261
AD	128	136	145	155	165	165	185	205	205
k	413	447	455	497	547	585	557	622	660
kB	457	496	513	570	631	669	644	740	778
LB	204	238	246	288	338	376	348	413	451
LB1	248	287	304	361	422	460	435	531	569

Motor dimension sheets see page 266
Description of motor lengths LB and LB1 see page 270

CF06 - Flange execution

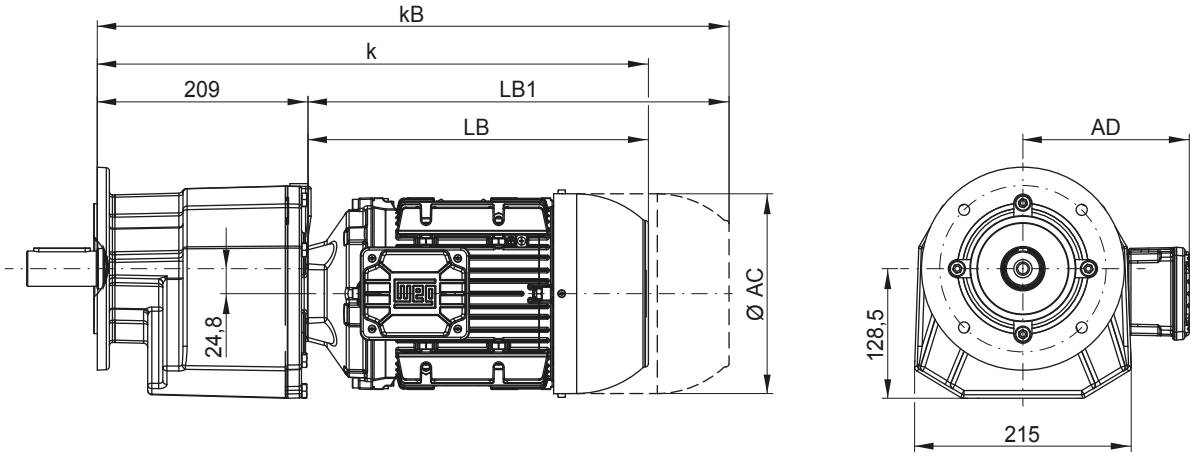

Flange Ø 200

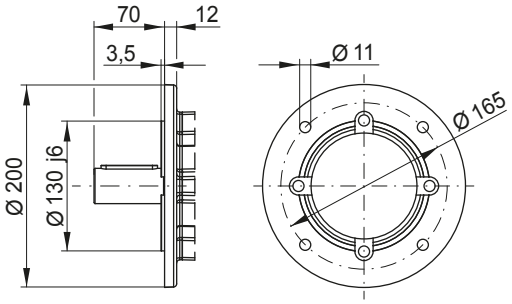

Flange Ø 250

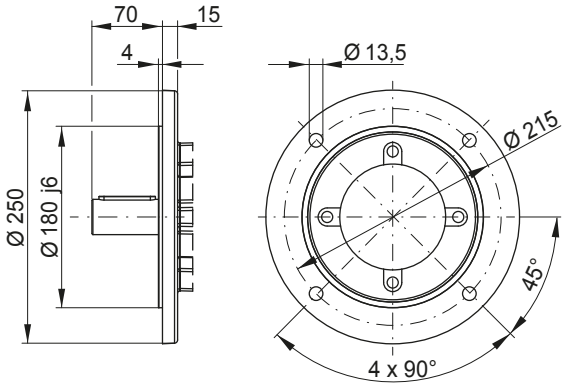

CA06 - Foot mounted and B5 flange execution

mountable flange sizes on the housing: Ø 200

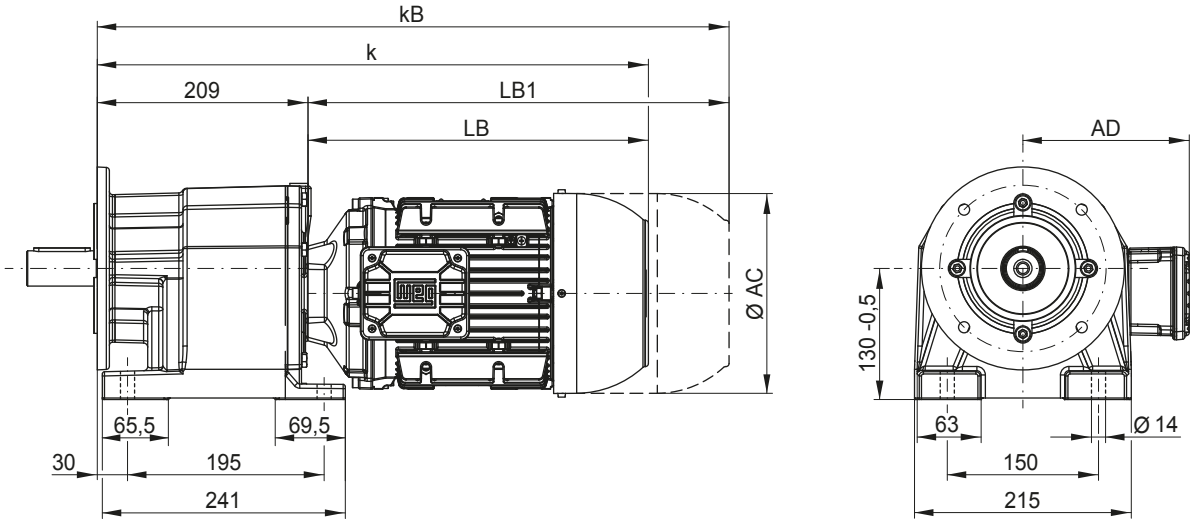

Dimensions in mm.

CG07 - Foot mounted

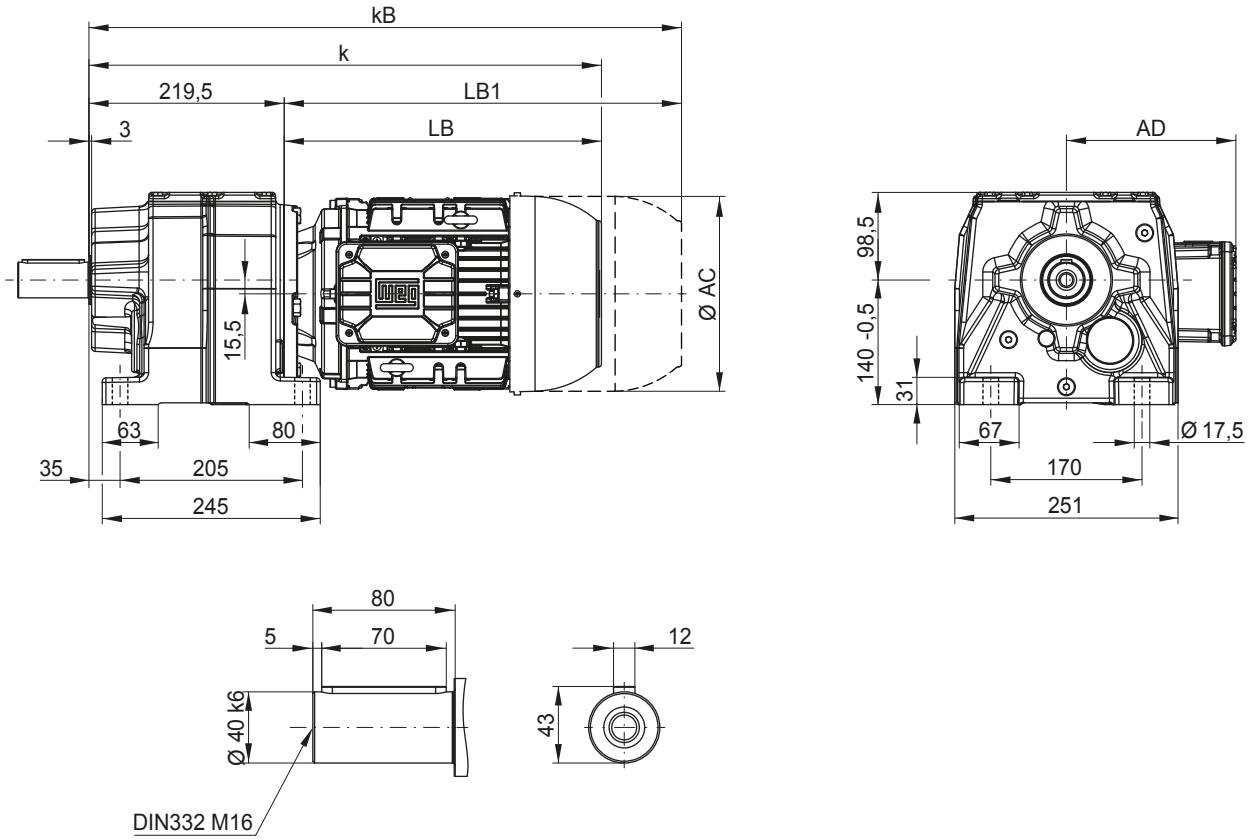

CW07 - Foot mounted with B14 flange execution + centring and threaded hole

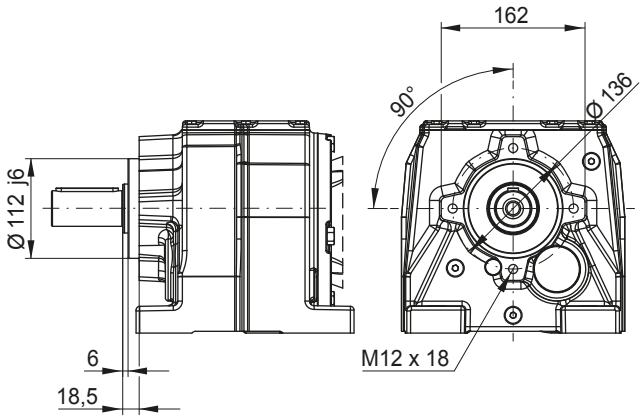

CC07 - B14 flange execution + centring and threaded hole

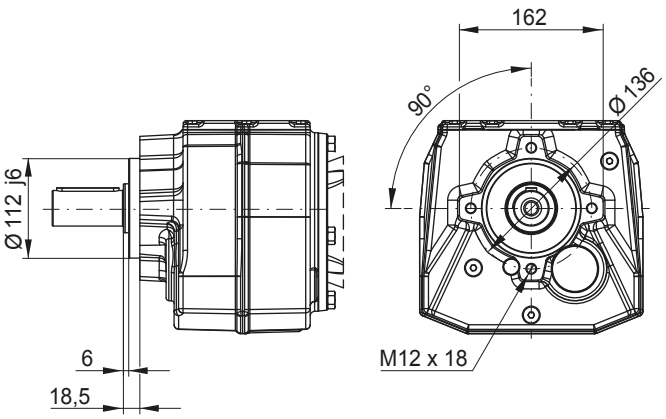

Motor fr. / Dimension	63	71	80	90S/L	100L	L100L	112M	132S,M	L132M	160M	160L
AC	126	141	159	178	199	199	221	261	261	318	318
AD	128	136	145	155	165	165	185	205	205	266	266
k	424	458	466	508	558	596	568	633	671	765	809
kB	468	507	524	581	642	680	655	751	789	889	933
LB	204	238	246	288	338	376	348	413	451	545	589
LB1	248	287	304	361	422	460	435	531	569	669	713

Motor dimension sheets see page 266
Description of motor lengths LB and LB1 see page 270

CF07 - Flange execution

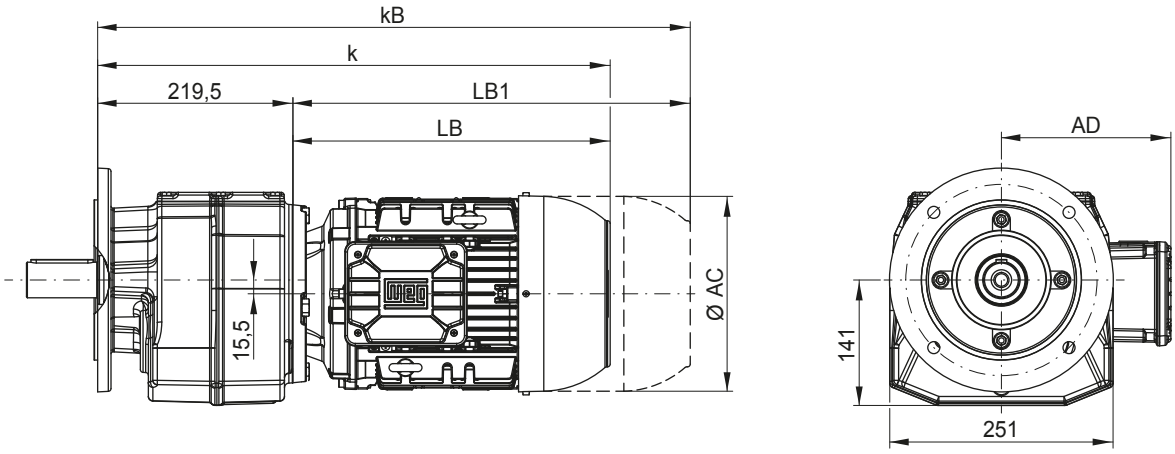

Flange Ø 250

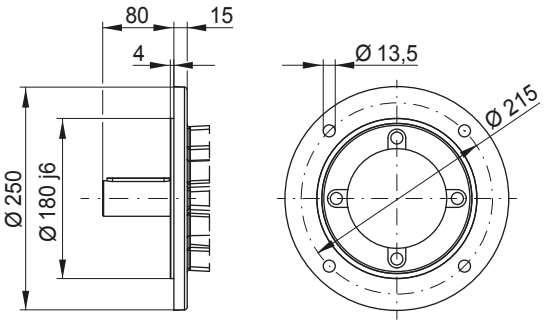

Flange Ø 300

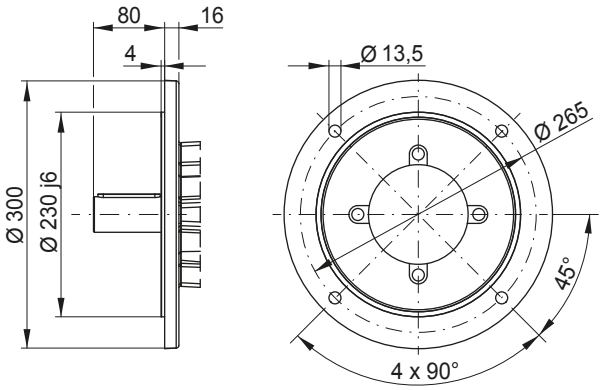

CA07 - Foot mounted and B5 flange execution

mountable flange sizes on the housing: Ø 250

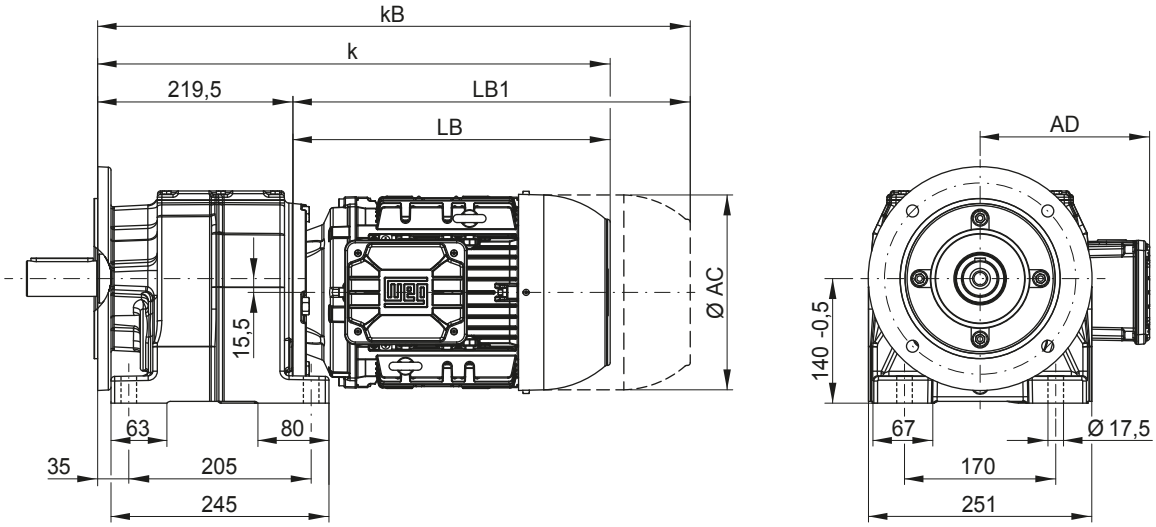

Dimensions in mm.

CG08 - Foot mounted

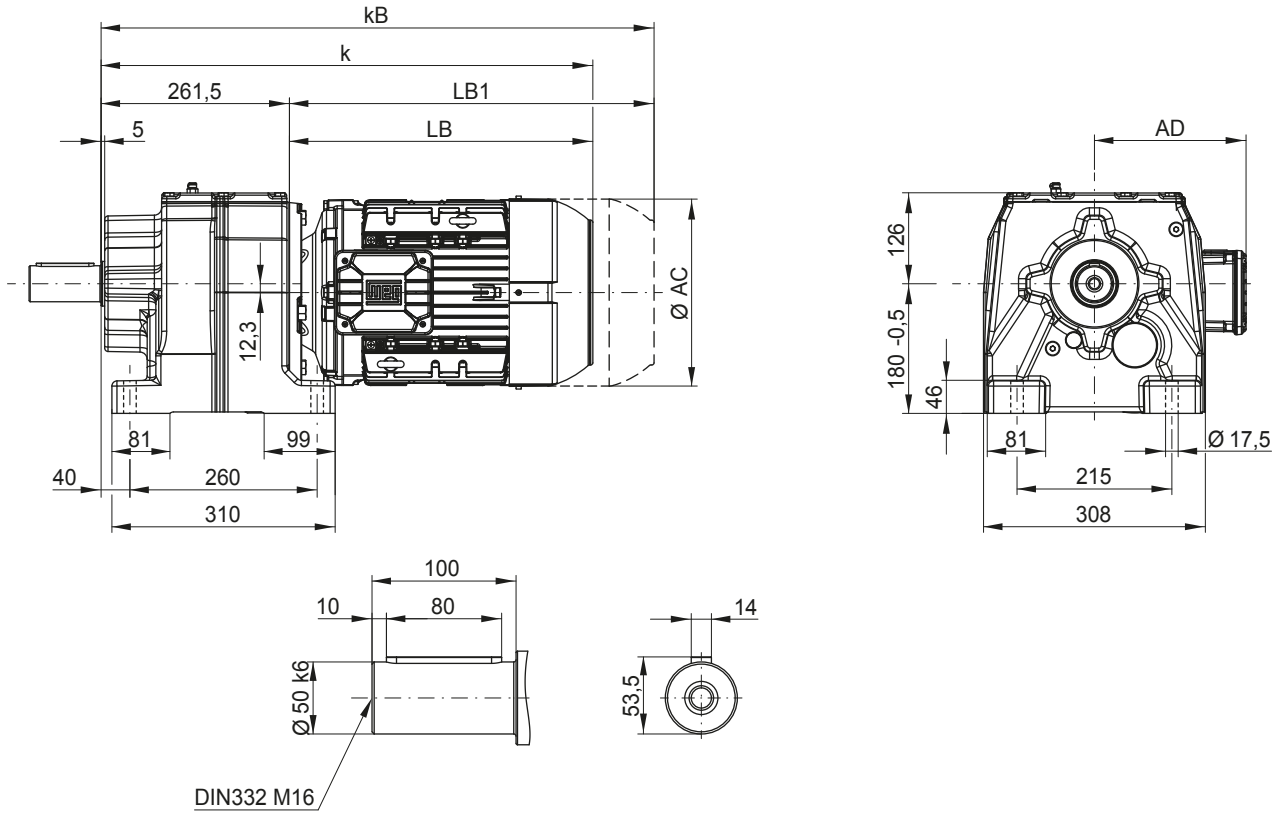

CW08 - Foot mounted with B14 flange execution + centring and threaded hole

CC08 - B14 flange execution + centring and threaded hole

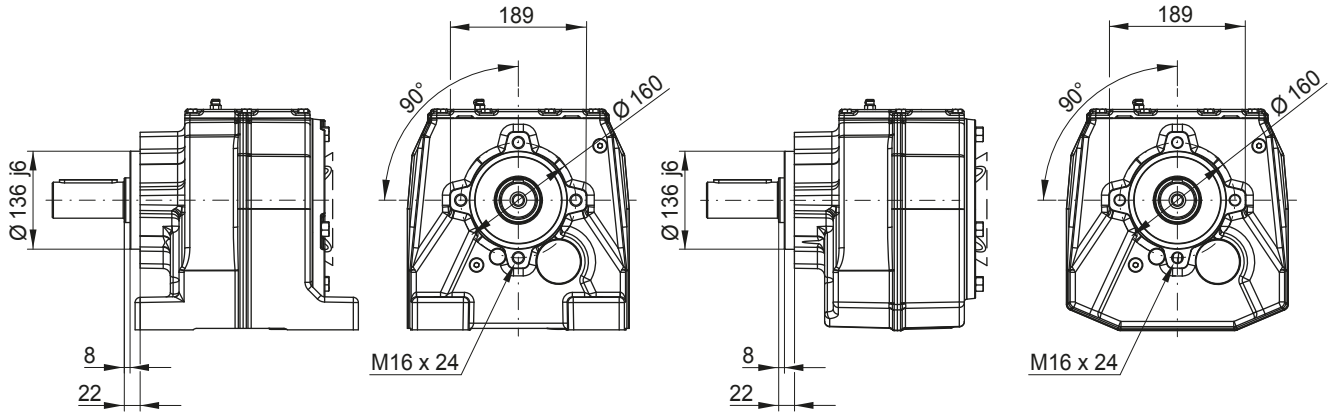

Motor fr. / Dimension	63	71	80	90S/L	100L	L100L	112M	132S,M	L132M	160M	160L	180M	180L
AC	126	141	159	178	199	199	221	261	261	318	318	347	347
AD	128	136	145	155	165	165	185	205	205	266	266	281	281
k	466	500	508	550	600	638	610	675	713	802	846	870	908
kB	510	549	566	623	684	722	697	793	831	926	970	988	1026
LB	204	238	246	288	338	376	348	413	451	540	584	608	646
LB1	248	287	304	361	422	460	435	531	569	664	708	726	764

Motor dimension sheets see page 266
Description of motor lengths LB and LB1 see page 270

CF08 - Flange execution

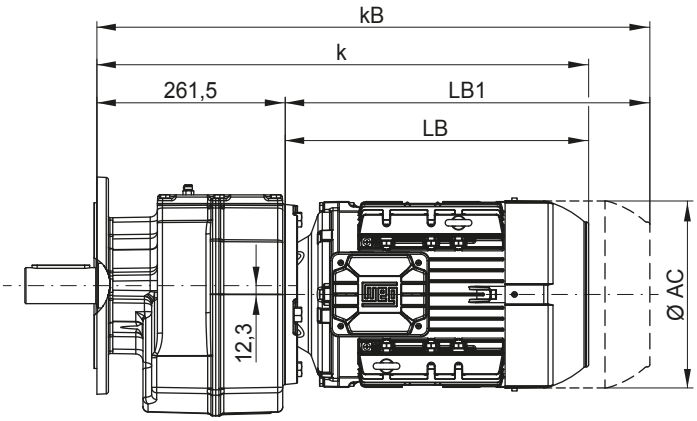

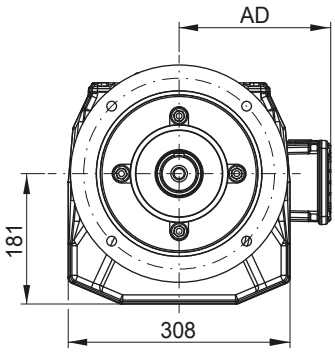

Flange Ø 300

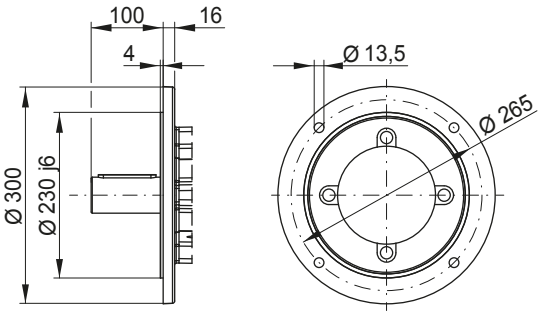

Flange Ø 350

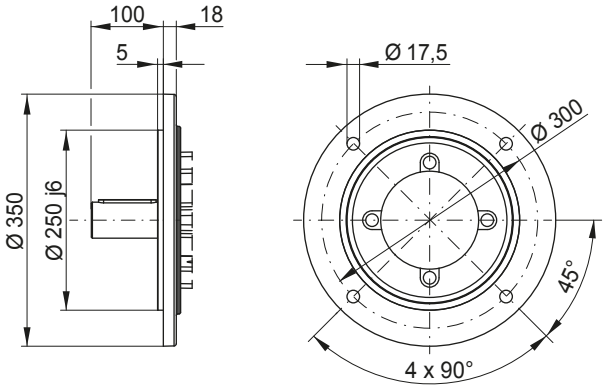

CA08 - Foot mounted and B5 flange execution

mountable flange sizes on the housing: Ø 300

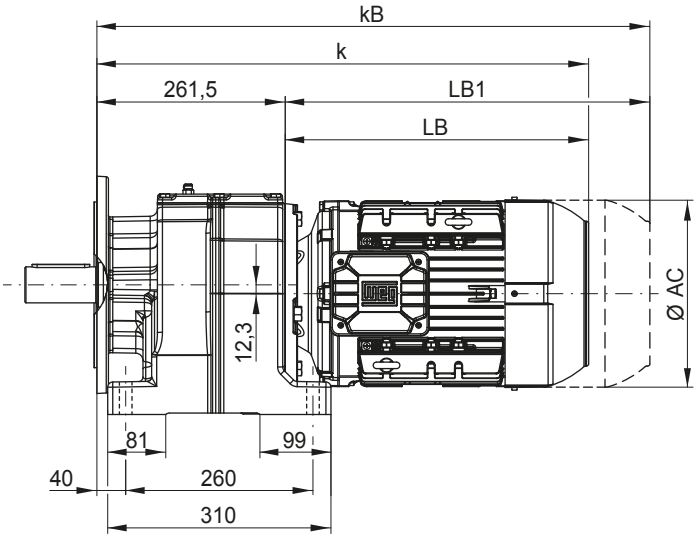

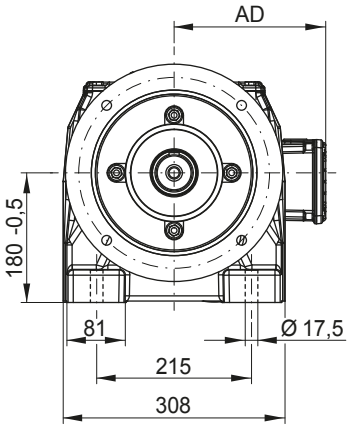

Dimensions in mm.

CG09 - Foot mounted

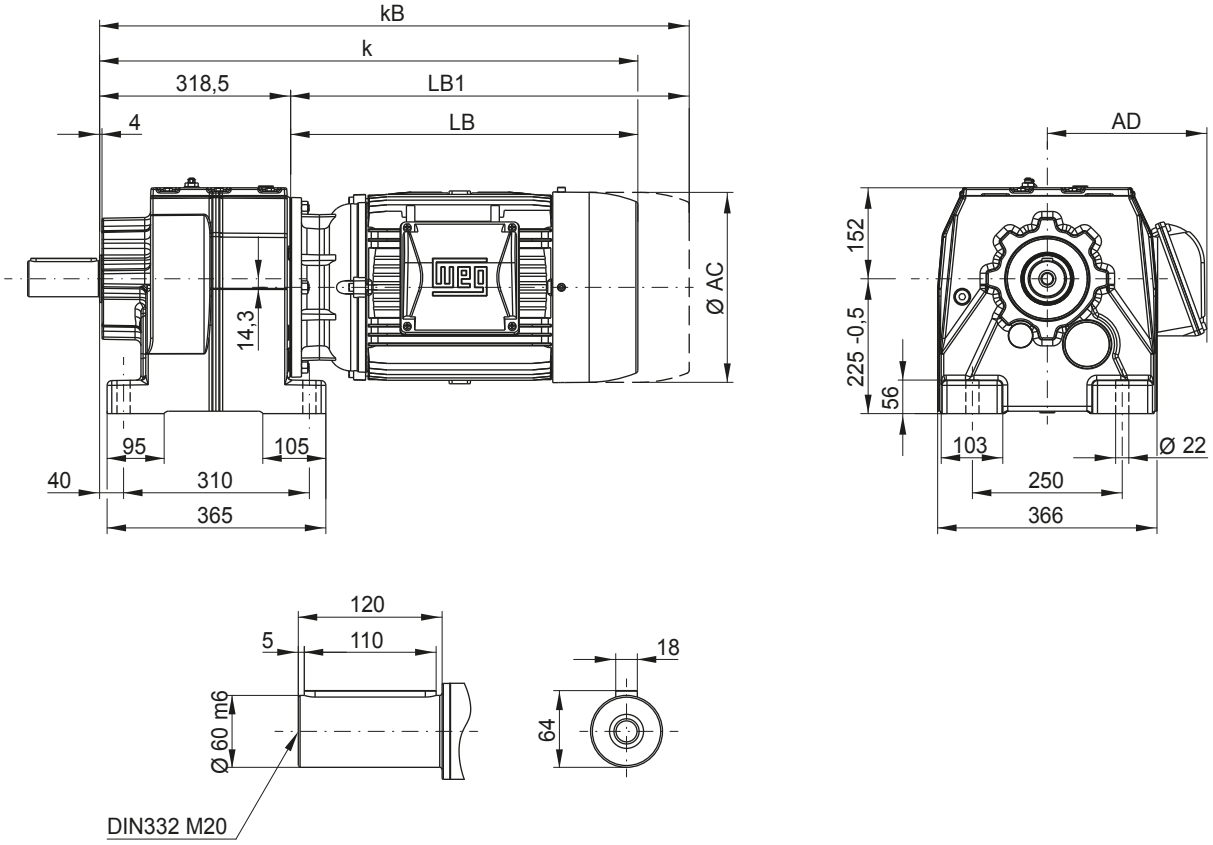

Motor fr. / Dimension	63	71	80	90S/L	100L	L100L	112M	132S,M	L132M	160M	160L	180M	180L	200L
AC	126	141	159	178	199	199	221	261	261	318	318	347	347	386
AD	128	136	145	155	165	165	185	205	205	266	266	281	281	317
k	523	557	565	607	657	695	667	732	770	854	898	922	960	1051
kB	567	606	623	680	741	779	754	850	888	978	1022	1040	1078	1177
LB	204	238	246	288	338	376	348	413	451	535	579	603	641	732
LB1	248	287	304	361	422	460	435	531	569	659	703	721	759	858

Motor dimension sheets see page 266
Description of motor lengths LB and LB1 see page 270

CF09 - Flange execution

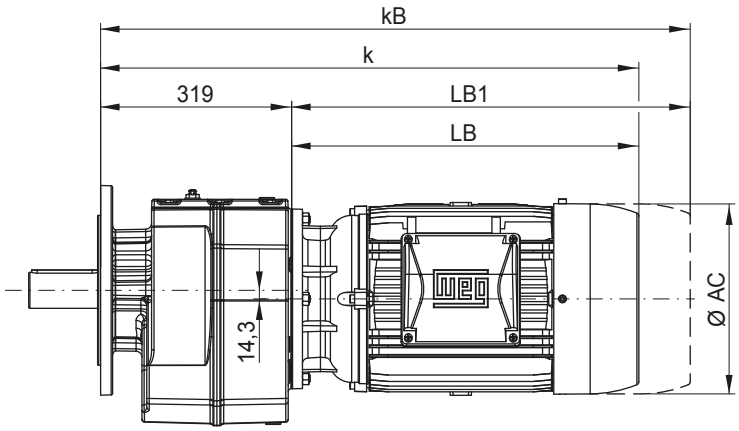

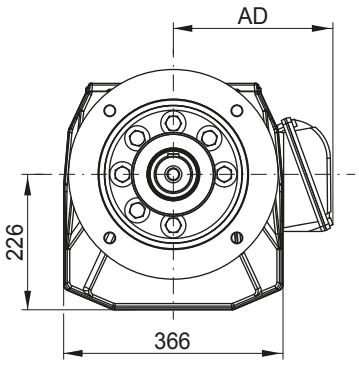

Flange Ø 350

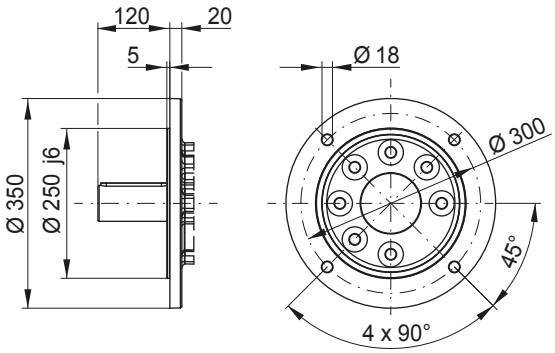

Flange Ø 450

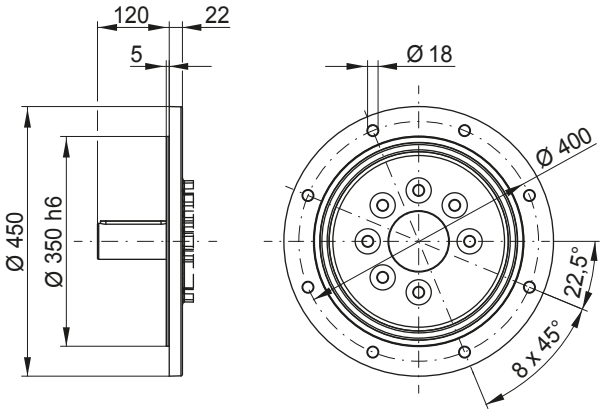

Dimensions in mm.

CG10 - Foot mounted

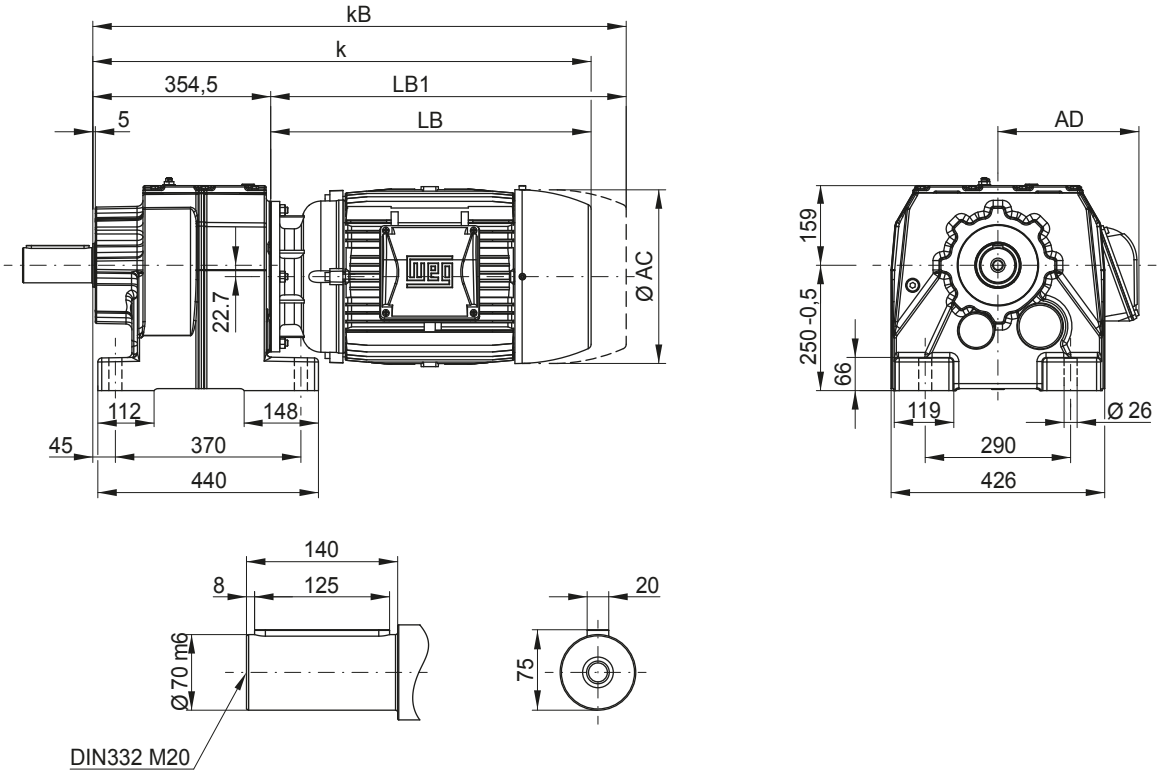

Motor fr. / Dimension	63	71	80	90S/L	100L	L100L	112M	132S,M	L132M	160M	160L	180M	180L	200L
AC	126	141	159	178	199	199	221	261	261	318	318	347	347	386
AD	128	136	145	155	165	165	185	205	205	266	266	281	281	317
k	559	593	601	643	693	731	703	768	806	890	934	958	996	1087
kB	603	642	659	716	777	815	790	886	924	1014	1058	1076	1114	1213
LB	204	238	246	288	338	376	348	413	451	535	579	603	641	732
LB1	248	287	304	361	422	460	435	531	569	659	703	721	759	858

Motor dimension sheets see page 266
Description of motor lengths LB and LB1 see page 270

CF10 - Flange execution

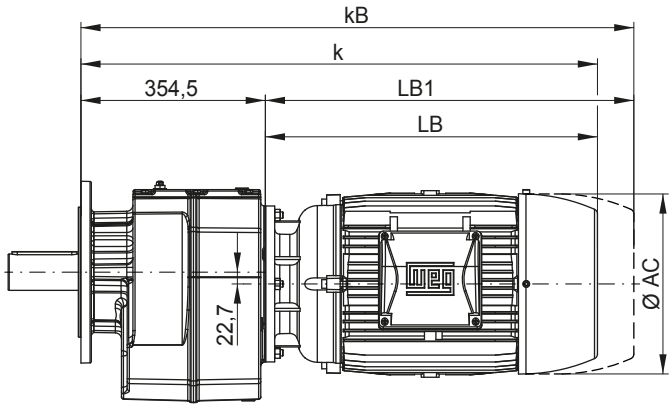

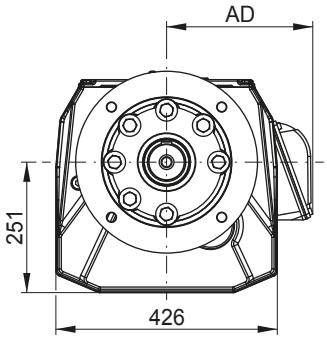

Flange Ø 350

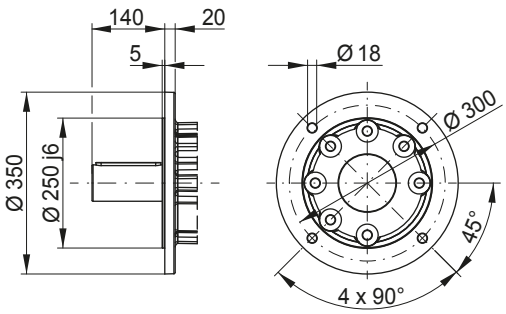

Flange Ø 450

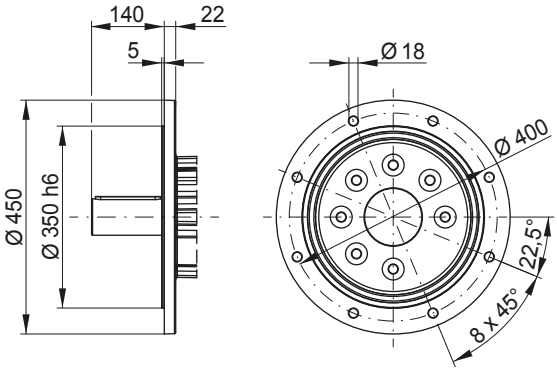

Dimensions in mm.

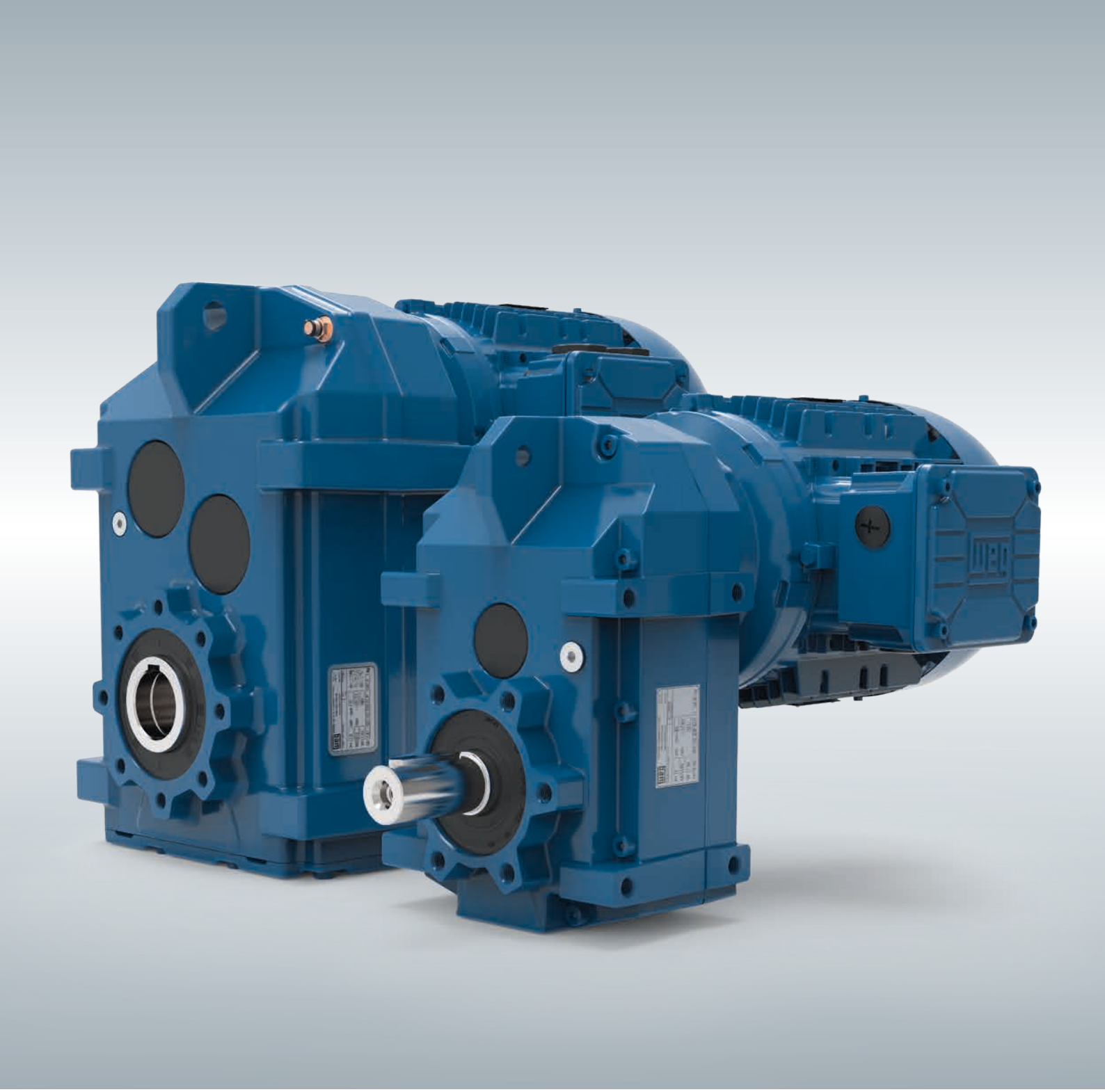

Parallel shaft geared motors F

Technical Data

Size		F02	F03	F04	F05	F06	F07	F08	F09
Power		0.12 - 1.5 kW	0.12 - 3 kW	0.12 - 3 kW	0.12 - 9.2 kW	0.12 - 15 kW	0.12 - 15 kW	0.55 - 22 kW	0.55 - 30 kW
Torque		130 Nm	220 Nm	400 Nm	600 Nm	820 Nm	1500 Nm	3000 Nm	4500 Nm
Ratio		3.93 - 97.85	3.85 - 70.17	4.42 - 422.98	5.17 - 487.67	4.41 - 412.64	4.29 - 305.42	4.09 - 358.52	4.16 - 288.50
Number of stages		2	2	2 / 3	2 / 3	2 / 3	2 / 3	2 / 3	2 / 3
Housing material		aluminium				cast iron			
Solid shaft	Type	with key acc. to DIN 6885.1 and threaded bore acc. to DIN 332 sheet 2							
	Tolerance	< Ø 55: k6 / ≥ Ø 55: m6							
	Material	standard: C45E (1.1191) / stainless steel on request							
Hollow shaft	Type	with key acc. to DIN 6885.1							
	Tolerance	H7							
	Material	standard: C45E (1.1191) / stainless steel on request							
Flanges	Tolerance	centring ≤ 250: j6 / > 250: h6 acc. to DIN EN 50347							
	Material	cast iron							
Gear wheels	Type	honed							
	Material	16MnCr5 (1.7131) case hardened – minimum 58HRC							
Shaft seals	Type	type AS acc. to DIN 3760							
	Material	standard NBR / special FKM							
Bearing		standard / reinforced							
Lubricants	Type	standard CLP 220 / special CLP HC 220							
	Quantity	depending on mounting position							
Axle height		acc. to DIN 747: ≤ 50: -0.4; > 50 to ≤ 250: -0.5; > 250: -1							

F

General information

1. Nameplate

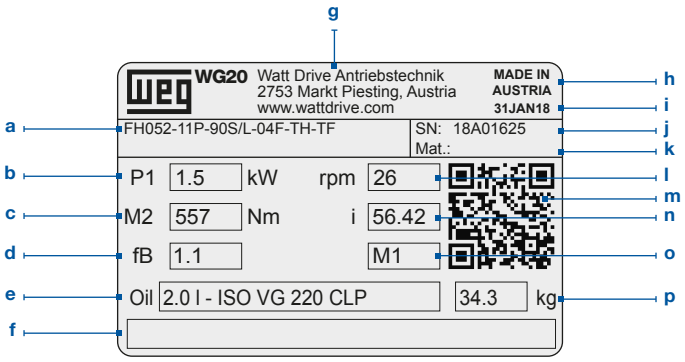

a	Type code	i	Production date
b	Motor power	j	Serial number
c	Output torque	k	Material number
d	Service factor	l	Output speed
e	Type and quantity of lubricant	m	QR-Code linked online to additional information
f	Space for additional information	n	Total gear ratio
g	Manufacturer address	o	Mounting position
h	Country of origin	p	Weight

2. Type code

FH073-11P-90S/L-04F ...

1 2 3 4 5 6 7 8 9

1	Type:	F = Parallel shaft gear unit
2	Design:	B = Output shaft on both sides D = Hollow shaft with shrink disc F = B5 flange execution with output shaft H = Hollow shaft O = B5 flange execution with hollow shaft P = B5 flange execution with hollow shaft and shrink disc S = Output shaft T = Hollow shaft with rubber buffer U = Hollow shaft with shrink disc and rubber buffer
3	Size:	02 03 04 05 06 07 08 09
4	Number of stages:	2 = 2 gear stages 3 = 3 gear stages
5	Motor type:	11N = Integral motor aluminium IE1 11P = Integral motor aluminium IE3 22P = Integral motor cast iron IE3
6	Motor frame size:	63 71 80 90S/L 100L L100L 112M 132S 132M L132M 160M 160L 180M 180L 200L
7	Number of poles:	04 = 4 poles 06 = 6 poles
8	Power indicator:	D E F G
9	Motor modules:	see from page 271

F

3. Range

Size	F02	F03	F04	F05	F06	F07	F08	F09
Housing material	Aluminium				Cast iron			

4. Design

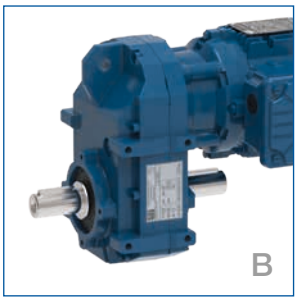

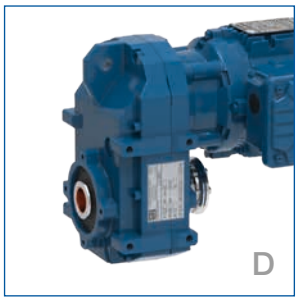

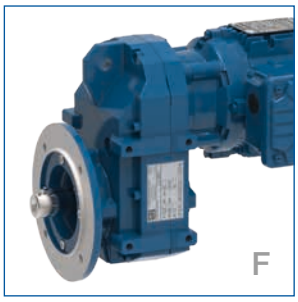

B	Output shaft on both sides
D	Hollow shaft with shrink disc
F	B5 flange execution with output shaft
H	Hollow shaft
O	B5 flange execution with hollow shaft

P	B5 flange execution with hollow shaft and shrink disc
S	Output shaft
T	Hollow shaft with rubber buffer
U	Hollow shaft with shrink disc and rubber buffer

5. Venting the gear unit

The parallel shaft gear unit sizes F02 to F05 are neither equipped with a venting nor an oil drain screw. They are supplied with lifetime-lubrication.
By default, the parallel shaft gear units F06 to F09 are equipped with venting screws with a safety strap for transportation (see illustration). The rubber strap (a) of the venting screw must be removed entirely before the initial startup. The venting screw is placed accordingly to the mounting position (see chapter Mounting positions, page 105)

6. Overhung and axial loads

The overhung loads (F_{rN}) indicated in the respective selection tables apply to gear units with the force acting on the shaft center (x=l/2). The permissible overhung loads listed are based on the least favourable loading direction and calculated for standard shafts and standard bearings. Other load directions and action can be calculated with equations Q1 to Q3. If transmission elements are placed on the output shaft, an appropriate factor (f_z) has to be taken into consideration when determining the overhung load.

Gear wheels	Sprockets		V-belts	Flat belts
f_z=1.1 (z≤17)	f_z=1.2 (z≤13)	f_z=1.1 (z>13)	f_z=1.8	f_z=2.5

Use the following equations Q1 and Q2 to calculate the permissible radial loads on the output shaft. Q3 is to calculate the real existing shaft loads for your application. The results are to be compared by using the equation Q4.

Q1	$F_{zL} = F_{rN} \cdot a_1$
Q2	$F_{zW} = F_W \cdot a_2$
Q3	$F_{Qvorh} = \frac{2 \cdot M_2}{d_0} \cdot f_z$
Q4	$F_{Qvorh} \leq F_{zL}$
	$F_{Qvorh} \leq F_{zW}$

Variable	Unit	Description
a_1		Load action factor - output shaft bearing from table 1
a_2		Load action factor - output shaft from table 1
d_0	[m]	Effective diameter of the transmission element
M_2	[Nm]	Geared motor output torque (from selection tables) or required calculated output torque
F_{zL}	[N]	Permissible overhung load for output shaft bearings
F_{zW}	[N]	Permissible overhung load for output shaft
F_{rN}	[N]	Permissible overhung load from selection tables
F_W	[N]	Permissible overhung load - Output shaft x=l/2 from table 2
F_{Qvorh}	[N]	Existing overhung load at gear shaft
f_z		Factor for transmission element
M_{max}	[Nm]	Highest possible output torque for coupling operation (table 2)

Always use both equations Q1 and Q2 for your calculations.

x / l						
0	0.25	0.5	0.75	1	1.5	2
$a_1 \rightarrow$ Equation Q1						
1.39	1.18	1.00	0.85	0.73	0.52	0.38
$a_2 \rightarrow$ Equation Q2						
2.00	2.00	1.00	0.55	0.38	0.23	0.17

Table 1: Load action factors a_1, a_2

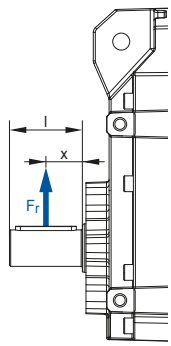

Intermediate values can be interpolated linearly. Combined load ($F_r \neq 0$; $F_a = 0$) on request.

	M_{max} at $F_r = 0$	Output torque M_2 [Nm]												
		50	100	200	300	400	600	820	1550	3000	4500	8000	13000	18000
		F_W [kN] at x/l = 0.5 → Equation Q2												
Ø 20x40	160	3.4	2.8											
Ø 25x50	300	5.9	5.7	4.8										
Ø 30x60	500		7.6	7.1	6.3	5.0								
Ø 35x70	800			11.0	11.0	10.0	8.3							
Ø 40x80	1170				14.0	13.0	12.0	10.7						
Ø 50x100	2250					24.0	24.0	23.0	20.0					
Ø 60x120	3740							31.0	30.0	23.0				
Ø 70x140	5850								44.0	41.0	36.0			
Ø 90x170	11700									72.0	70.0	61.0		
Ø 110x210	20800										106.0	103.0	93.0	
Ø 120x210	26700											129.0	121.0	109.0

Table 2: Permissible overhung load - output shaft x = l/2

In cases where there is no overhung load, the permissible axial load (push or pull) may be determined by taking 50 % of the permissible overhung loads indicated in the selection tables of the respective type of gear. If there are axial loads or radial and axial components acting on the drive which are extraordinarily high, we recommend to contact the manufacturer.

7. Mounting positions, Position of the terminal box and Cable entry

Mounting positions - Sizes F02 to F05

Gear units F02 to F05 are not ventilated and supplied with lifetime lubrication.

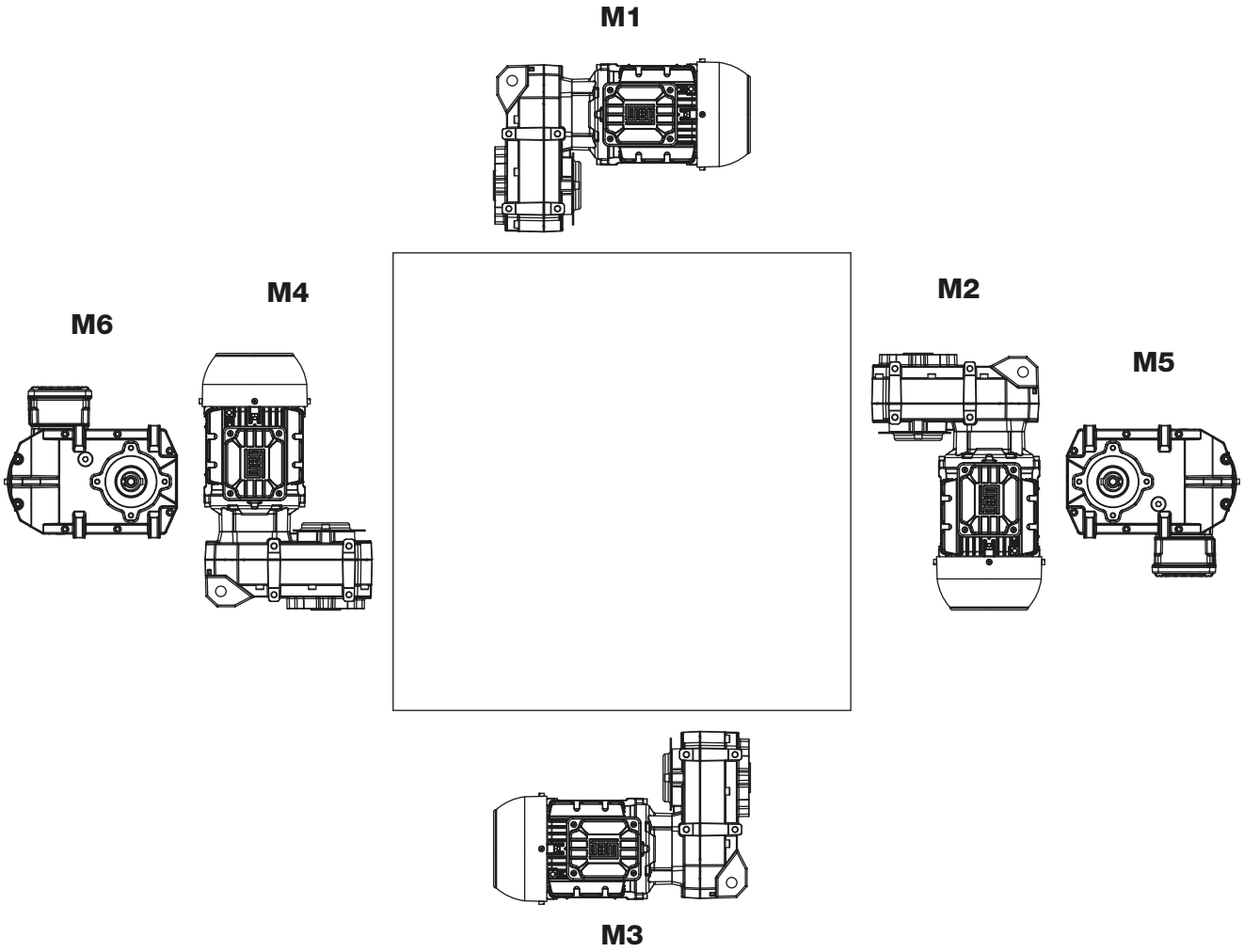

Position of the terminal box
Standard: Position 1

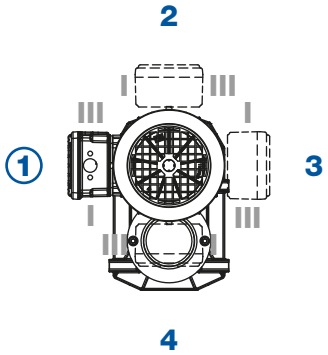

Cable entry
Standard: Position I

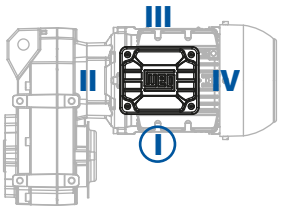

Side indication

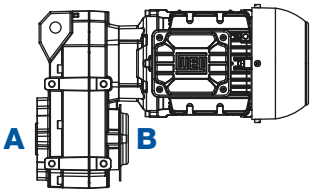

Mounting positions - Sizes F06 to F09

Position of the venting screw

Position of the oil drain screw

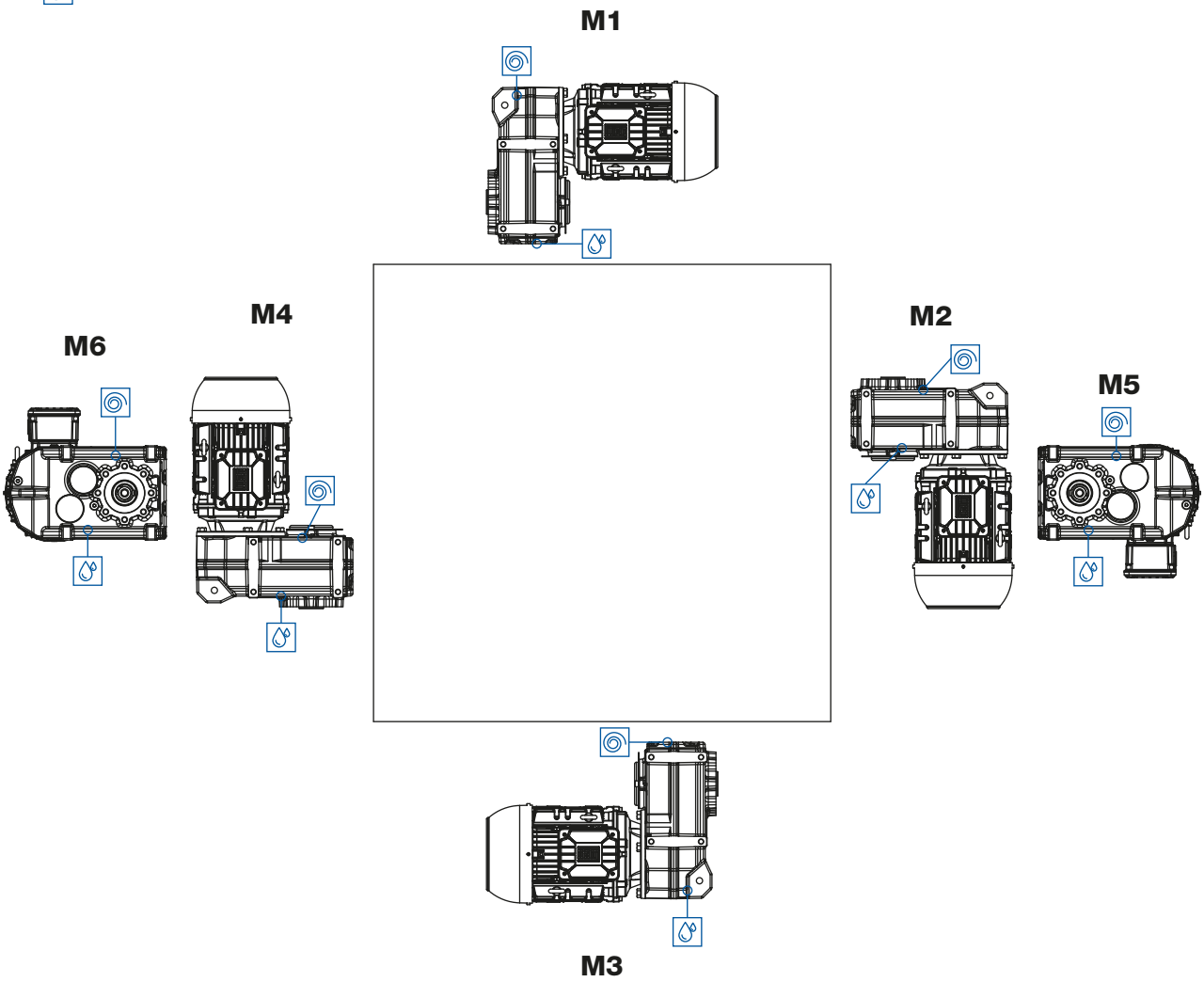

Position of the terminal box
Standard: Position 1

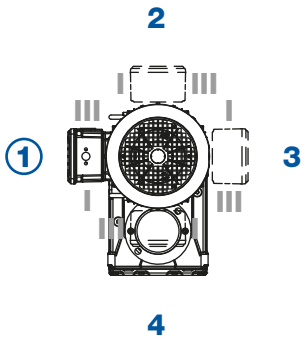

Cable entry
Standard: Position I

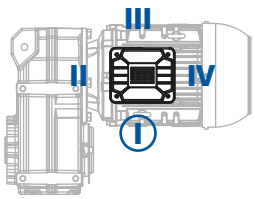

Side indication

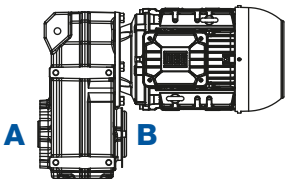

F

Selection tables - Geared motors

The technical data of the geared motors shown in the selection tables apply to an ambient temperature of +20 °C.

The selection tables are calculated with following motor data:

Power (IEC frame size)	Motor series (IE class)
up to 0.55 kW (63 - 80)	11N (IE1) - aluminium
0.75 - 9.2 kW (80 - 132)	11P (IE3) - aluminium
11 - 30 kW (160 - 200)	22P (IE3) - cast iron

F

Structure of the selection tables

1								2
P_N = 0.12 kW								IE1
50 Hz 0.12 kW	60 Hz 0.14 kW *)				at 50 Hz			
n_{50} min^{-1}	n_{60} min^{-1}	M_2 Nm	f_B	i	F_{rN} kN	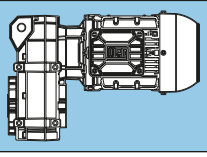	m kg	Dimension sheet see page
3	4	5	6	7	8	9	10	11

1 Rated power of the motor

2 Given values are based on the respective efficiency class

3 Output speed at 50 Hz

4 Output speed at 60 Hz

5 Output torque

6 Service factor

7 Total ratio

8 Permissible radial load at midpoint of the output shaft extension (standard bearing) at axial load=0

9 Geared motor type

10 Weight

11 Dimension sheet see page

*) Increased rated power at 60 Hz can only be reached together with increased voltage within the wide range (for details see page 254).

Increased rated power
1.2 x P_N

P_N = 0.12 kW								IE1
50 Hz 0.12 kW n_{50} min^{-1}	60 Hz 0.14 kW n_{60} min^{-1}	M_2 Nm	f_B	i	at 50 Hz F_{rN} kN	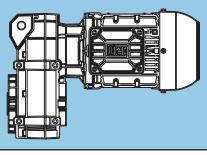	m kg	Dimension sheet see page
2.2	2.7	531	1.55	412.64	11.0	**FH063-11N-63-06F** **FO063-11N-63-06F**	36	164
2.4	2.9	487	1.70	378.37	11.2			
2.6	3.3	435	1.90	337.44	11.5			
2.9	3.6	398	2.10	309.42	11.7			
3.3	4.1	343	2.40	266.44	11.9			
3.6	4.5	315	2.65	244.32	12.0			
3.3	4.1	344	2.40	412.64	11.9	**FH063-11N-63-04E** **FO063-11N-63-04E**	35	164
3.6	4.5	315	2.65	378.37	12.0			
4.1	5.0	281	2.95	337.44	12.1			
1.8	2.3	628	1.00	487.67	**	**FH053-11N-63-06F** **FO053-11N-63-06F**	20	162
2.0	2.5	574	1.05	445.56	6.5			
2.3	2.9	489	1.25	379.87	7.5			
2.6	3.2	447	1.35	347.07	7.9			
2.9	3.6	397	1.55	308.00	8.3			
3.2	3.9	362	1.65	281.41	8.6			
3.7	4.6	312	1.95	242.67	8.9			
4.0	5.0	285	2.10	221.71	9.0			
4.8	5.9	241	2.50	187.00	9.3			
5.2	6.5	220	2.75	170.85	9.3			
2.8	3.5	406	1.50	487.67	8.3	**FH053-11N-63-04E** **FO053-11N-63-04E**	19	162
3.1	3.8	371	1.65	445.56	8.5			
3.6	4.5	317	1.90	379.87	8.9			
4.0	4.9	289	2.10	347.07	9.0			
4.5	5.5	257	2.35	308.00	9.2			
4.9	6.0	235	2.55	281.41	9.3			
5.7	7.0	202	3.00	242.67	9.4			
2.3	2.9	497	0.85	385.85	**	**FH043-11N-63-06F** **FO043-11N-63-06F**	14	160
2.7	3.4	424	0.95	329.48	**			
3.0	3.7	387	1.05	300.55	4.1			
3.3	4.1	344	1.20	267.14	4.9			
3.7	4.5	314	1.30	243.69	5.3			
4.2	5.2	271	1.50	210.48	5.8			
4.6	5.8	247	1.65	192.00	6.0			
5.5	6.8	209	1.95	162.19	6.3			
6.0	7.5	191	2.10	147.96	6.4			
7.0	8.7	163	2.50	126.72	6.6			
7.7	9.6	149	2.70	115.60	6.7			
3.3	4.0	353	1.15	422.98	4.7	**FH043-11N-63-04E** **FO043-11N-63-04E**	13	160
3.6	4.4	322	1.25	385.85	5.2			
4.2	5.1	275	1.50	329.48	5.7			
4.6	5.6	250	1.60	300.55	6.0			
5.1	6.3	223	1.80	267.14	6.2			
5.6	7.0	203	2.00	243.69	6.4			
6.5	8.1	175	2.30	210.48	6.5			
7.2	8.8	160	2.50	192.00	6.6			
8.5	10	135	3.00	162.19	6.7			
13	16	90	2.45	70.17	4.9	**FH032-11N-63-06F** **FO032-11N-63-06F**	12	158
14	17	82	2.70	63.63	4.9			
16	19	73	3.00	57.07	5.0			
9.1	11	126	1.05	97.85	4.8	**FH022-11N-63-06F** **FO022-11N-63-06F**	9.9	156
10	13	113	1.15	88.09	4.9			
12	14	98	1.35	76.22	5.0			
13	16	88	1.50	68.62	5.0			
14	18	80	1.65	61.80	5.1			
16	20	72	1.85	55.64	5.1			
18	23	63	2.10	48.69	5.1			
20	25	56	2.35	43.83	5.2			
24	29	48	2.70	37.52	5.2			
26	33	43	3.00	33.78	5.2			
28	35	41	1.30	31.79	5.2			
36	45	32	2.65	24.76	5.2			

Legend see page 107

*** ... on request*

P_N = 0.12 kW								IE1
50 Hz 0.12 kW n_{50} min^{-1}	60 Hz 0.14 kW n_{60} min^{-1}	M_2 Nm	f_B	i	at 50 Hz F_{rN} kN	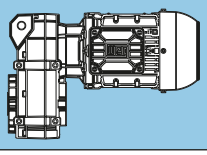	m kg	Dimension sheet see page
14	17	82	1.60	97.85	5.1	FH022-11N-63-04E FO022-11N-63-04E	9.2	156
16	19	73	1.80	88.09	5.1			
18	22	64	2.05	76.22	5.1			
20	25	57	2.30	68.62	5.2			
22	27	52	2.55	61.80	5.2			
25	30	46	2.85	55.64	5.2			
28	35	41	3.25	48.69	5.2			
31	39	37	3.60	43.83	5.2			
37	45	31	4.20	37.52	5.2			
41	50	28	4.65	33.78	5.2			
43	53	26	2.05	31.79	5.2			
47	58	24	5.35	29.32	5.2			
52	64	22	5.95	26.39	5.2			
56	68	21	4.10	24.76	5.2			
63	77	18	7.15	21.89	5.2			
68	84	17	5.05	20.08	5.2			
70	86	16	7.95	19.70	5.3			
83	103	14	9.50	16.48	5.2			
87	107	13	6.40	15.82	5.1			
93	114	12	10.55	14.84	5.0			
113	139	10	8.30	12.19	4.7			
114	140	10	12.95	12.09	4.7			
126	156	9	14.35	10.89	4.5			
144	178	8	10.60	9.52	4.3			
193	238	6	14.20	7.11	3.9			
257	317	4	18.85	5.35	3.6			
350	431	3	22.00	3.93	3.2			

Legend see page 107

P_N = 0.18 kW								IE1
50 Hz 0.18 kW n_{50} min^{-1}	60 Hz 0.22 kW n_{60} min^{-1}	M_2 Nm	f_B	i	at 50 Hz F_{rN} kN	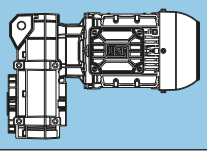	m kg	Dimension sheet see page
2.3	2.9	740	2.05	385.37	19.4	**FH073-11N-71-06E** **FO073-11N-71-06E**	61	166
2.9	3.6	587	2.60	305.42	19.8			
2.2	2.7	793	1.05	412.64	8.9	**FH063-11N-71-06E** **FO063-11N-71-06E**	38	164
2.4	2.9	727	1.15	378.37	9.5			
2.7	3.3	648	1.30	337.44	10.2			
2.9	3.6	594	1.40	309.42	10.6			
3.4	4.1	512	1.65	266.44	11.1			
3.7	4.5	469	1.75	244.32	11.3			
4.3	5.3	397	2.10	206.59	11.7			
4.7	5.8	364	2.30	189.44	11.8			
5.3	6.5	325	2.55	169.09	11.9			
5.8	7.1	298	2.80	155.05	12.0			
3.3	4.1	518	1.60	412.64	11.1	**FH063-11N-63-04F** **FO063-11N-63-04F**	36	164
3.6	4.5	475	1.75	378.37	11.3			
4.1	5.0	423	1.95	337.44	11.6			
4.4	5.5	388	2.15	309.42	11.7			
5.1	6.4	334	2.50	266.44	11.9			
5.6	7	307	2.70	244.32	12.0			
2.4	2.9	730	0.85	379.87	**	**FH053-11N-71-06E** **FO053-11N-71-06E**	22	162
2.6	3.2	667	0.90	347.07	**			
2.9	3.6	592	1.05	308.00	6.2			
3.2	3.9	540	1.15	281.41	6.9			
3.7	4.6	466	1.30	242.67	7.8			
4.0	5.0	426	1.45	221.71	8.1			
4.8	5.9	359	1.70	187.00	8.6			
5.2	6.5	328	1.85	170.85	8.8			
6.1	7.6	281	2.15	146.10	9.1			
6.7	8.3	256	2.35	133.49	9.2			
8.2	10	210	2.90	109.08	9.4			
2.8	3.5	612	1.00	487.67	**	**FH053-11N-63-04F** **FO053-11N-63-04F**	20	162
3.1	3.8	559	1.10	445.56	6.7			
3.6	4.5	477	1.30	379.87	7.6			
3.9	4.9	435	1.40	347.07	8.0			
4.4	5.5	386	1.60	308.00	8.4			
4.9	6.0	353	1.70	281.41	8.7			
5.6	7.0	304	2.00	242.67	8.9			
6.2	7.7	278	2.15	221.71	9.1			
7.3	9.1	235	2.60	187.00	9.3			
8.0	10	214	2.80	170.85	9.4			
10	13	168	2.25	87.38	9.5	**FH052-11N-71-06E** **FO052-11N-71-06E**	22	162
11	14	153	2.25	79.84	9.5			
19	23	92	2.25	48.15	9.7			
3.4	4.1	513	0.80	267.14	**	**FH043-11N-71-06E** **FO043-11N-71-06E**	16	160
3.7	4.5	468	0.90	243.69	**			
4.3	5.2	404	1.00	210.48	**			
4.7	5.8	369	1.10	192.00	4.4			
5.5	6.8	312	1.30	162.19	5.3			
6.0	7.5	284	1.45	147.96	5.6			
7.1	8.7	243	1.65	126.72	6.0			
7.7	9.6	222	1.85	115.60	6.2			
9.5	12	182	2.25	94.61	6.5			
10	13	166	2.45	86.31	6.6			
13	16	137	2.95	71.24	6.7			
3.2	4.0	531	0.80	422.98	**	**FH043-11N-63-04F** **FO043-11N-63-04F**	14	160
3.6	4.4	484	0.85	385.85	**			
4.2	5.2	413	1.00	329.48	**			
4.6	5.7	377	1.10	300.55	4.3			
5.1	6.4	335	1.20	267.14	5.0			
5.6	7.0	306	1.35	243.69	5.4			
6.5	8.1	264	1.55	210.48	5.9			
7.1	8.9	241	1.70	192.00	6.1			
8.4	10	204	2.00	162.19	6.4			
9.3	11	186	2.20	147.96	6.5			
11	13	159	2.55	126.72	6.6			
12	15	145	2.80	115.60	6.7			

P_N = 0.18 kW								IE1
50 Hz 0.18 kW n_{50} min^{-1}	60 Hz 0.22 kW n_{60} min^{-1}	M_2 Nm	f_B	i	at 50 Hz F_{rN} kN	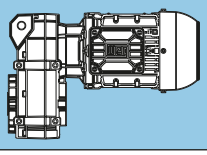	m kg	Dimension sheet see page
12	15	146	2.25	75.79	6.7	**FH042-11N-71-06E** **FO042-11N-71-06E**	16	160
13	16	133	2.25	69.14	6.8			
22	27	79	2.25	41.20	6.9			
13	16	135	1.65	70.17	4.6	**FH032-11N-71-06E** **FO032-11N-71-06E**	15	158
14	17	122	1.85	63.63	4.7			
16	19	110	2.05	57.07	4.8			
17	21	99	2.25	51.75	4.8			
20	24	87	2.55	45.35	4.9			
22	27	79	2.80	41.12	5.0			
32	40	53	2.25	27.67	5.1			
20	24	88	2.50	70.17	4.9	**FH032-11N-63-04F** **FO032-11N-63-04F**	13	158
22	27	80	2.80	63.63	4.9			
10	13	169	0.80	88.09	**	**FH022-11N-71-06E** **FO022-11N-71-06E**	12	156
12	14	146	0.90	76.22	**			
13	16	132	1.00	68.62	**			
14	18	119	1.10	61.80	4.8			
16	20	107	1.25	55.64	4.9			
18	23	94	1.40	48.69	5.0			
20	25	84	1.55	43.83	5.0			
24	29	72	1.85	37.52	5.1			
26	33	65	2.05	33.78	5.1			
28	35	61	0.90	31.79	**			
31	38	56	2.35	29.32	5.2			
34	42	51	2.60	26.39	5.2			
36	45	48	1.80	24.76	5.2			
45	55	39	2.20	20.08	5.2			
57	70	30	2.80	15.82	5.2			
14	17	123	1.10	97.85	4.8	**FH022-11N-63-04F** **FO022-11N-63-04F**	10	156
16	19	111	1.20	88.09	4.9			
18	22	96	1.40	76.22	5.0			
20	25	86	1.55	68.62	5.0			
22	28	78	1.70	61.80	5.1			
25	31	70	1.90	55.64	5.1			
28	35	61	2.15	48.69	5.1			
31	39	55	2.40	43.83	5.2			
37	45	47	2.80	37.52	5.2			
41	50	42	3.10	33.78	5.2			
43	53	40	1.35	31.79	5.2			
47	58	37	3.55	29.32	5.2			
52	64	33	3.95	26.39	5.2			
55	69	31	2.75	24.76	5.2			
63	78	27	4.75	21.89	5.2			
68	85	25	3.35	20.08	5.2			
70	86	25	5.30	19.70	5.2			
83	103	21	6.30	16.48	5.2			
87	107	20	4.25	15.82	5.2			
92	115	19	7.00	14.84	5.1			
112	139	15	5.50	12.19	4.8			
113	141	15	8.60	12.09	4.8			
126	156	14	9.55	10.89	4.6			
144	179	12	7.05	9.52	4.4			
193	239	9.0	9.45	7.11	3.9			
256	318	7.0	12.55	5.35	3.6			
349	433	5.0	14.65	3.93	3.2			

Legend see page 107

*** ... on request*

P_N = 0.25 kW								IE1
50 Hz 0.25 kW n_{50} min^{-1}	60 Hz 0.30 kW n_{60} min^{-1}	M_2 Nm	f_B	i	at 50 Hz F_{rN} kN	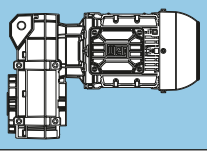	m kg	Dimension sheet see page
2.3	2.9	1022	1.50	385.37	18.4	**FH073-11N-71-06F** **FO073-11N-71-06F**	63	166
2.9	3.6	810	1.90	305.42	19.2			
3.8	4.7	629	2.40	237.15	19.7			
4.6	5.7	516	2.95	194.58	20.0			
3.6	4.4	672	2.25	385.37	19.6	**FH073-11N-71-04E** **FO073-11N-71-04E**	60	166
4.5	5.6	532	2.85	305.42	19.9			
2.4	2.9	1004	0.85	378.37	**	**FH063-11N-71-06F** **FO063-11N-71-06F**	40	164
2.7	3.3	895	0.95	337.44	**			
2.9	3.6	821	1.00	309.42	**			
3.4	4.2	707	1.20	266.44	9.7			
3.7	4.5	648	1.30	244.32	10.2			
4.4	5.4	548	1.50	206.59	10.9			
4.8	5.9	503	1.65	189.44	11.2			
5.3	6.6	449	1.85	169.09	11.4			
5.8	7.2	411	2.00	155.05	11.6			
6.9	8.5	345	2.40	130.15	11.9			
7.5	9.3	317	2.60	119.35	12.0			
3.3	4.1	719	1.15	412.64	9.6	**FH063-11N-71-04E** **FO063-11N-71-04E**	37	164
3.6	4.5	659	1.25	378.37	10.1			
4.1	5.0	588	1.40	337.44	10.6			
4.4	5.5	539	1.55	309.42	10.9			
5.1	6.4	464	1.80	266.44	11.4			
5.6	7.0	426	1.95	244.32	11.5			
6.6	8.2	360	2.30	206.59	11.8			
7.2	9.0	330	2.50	189.44	11.9			
8.1	10	295	2.80	169.09	12.0			
3.2	3.9	747	0.80	281.41	**	**FH053-11N-71-06F** **FO053-11N-71-06F**	23	162
3.7	4.6	644	0.95	242.67	**			
4.1	5.0	588	1.05	221.71	6.3			
4.8	5.9	496	1.25	187.00	7.4			
5.3	6.5	453	1.35	170.85	7.9			
6.2	7.6	388	1.55	146.10	8.4			
6.7	8.3	354	1.70	133.49	8.7			
8.3	10	289	2.10	109.08	9.0			
9.0	11	264	2.30	99.66	9.2			
11	14	218	2.80	82.13	9.3			
12	15	199	3.00	75.04	9.4			
3.1	3.8	776	0.80	445.56	**	**FH053-11N-71-04E** **FO053-11N-71-04E**	20	162
3.6	4.5	662	0.95	379.87	**			
3.9	4.9	605	1.00	347.07	**			
4.4	5.5	537	1.15	308.00	7.0			
4.9	6.0	490	1.25	281.41	7.5			
5.6	7.0	423	1.45	242.67	8.1			
6.2	7.7	386	1.55	221.71	8.4			
7.3	9.1	326	1.85	187.00	8.8			
8.0	10	298	2.05	170.85	9.0			
9.4	12	255	2.40	146.10	9.2			
10	13	233	2.60	133.49	9.3			
10	13	232	1.65	87.38	9.3	**FH052-11N-71-06F** **FO052-11N-71-06F**	23	162
11	14	212	1.65	79.84	9.4			
13	16	190	2.65	71.46	9.4			
14	17	173	2.65	65.29	9.5			
19	23	128	1.60	48.15	9.6			
23	28	104	2.65	39.38	9.7			
16	19	152	2.45	87.38	9.6	**FH052-11N-71-04E** **FO052-11N-71-04E**	20	162
17	21	139	2.45	79.84	9.6			
28	35	84	2.45	48.15	9.7			

Legend see page 107

*** ... on request*

P_N = 0.25 kW								IE1
50 Hz 0.25 kW n_{50} min^{-1}	60 Hz 0.30 kW n_{60} min^{-1}	M_2 Nm	f_B	i	at 50 Hz F_{rN} kN	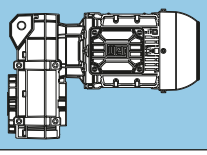	m kg	Dimension sheet see page
4.7	5.8	509	0.80	192.00	**	**FH043-11N-71-06F FO043-11N-71-06F**	18	160
5.5	6.8	430	0.95	162.19	**			
6.1	7.5	393	1.05	147.96	4.0			
7.1	8.8	336	1.20	126.72	5.0			
7.8	9.6	307	1.35	115.60	5.4			
9.5	12	251	1.60	94.61	6.0			
10	13	229	1.75	86.31	6.2			
13	16	189	2.15	71.24	6.5			
14	17	172	2.35	64.98	6.6			
17	21	139	2.90	52.27	6.7			
4.6	5.7	524	0.80	300.55	**	**FH043-11N-71-04E FO043-11N-71-04E**	15	160
5.1	6.4	466	0.90	267.14	**			
5.6	7.0	425	0.95	243.69	**			
6.5	8.1	367	1.10	210.48	4.5			
7.1	8.9	335	1.20	192.00	5.0			
8.4	10	283	1.45	162.19	5.7			
9.3	11	258	1.60	147.96	5.9			
11	13	221	1.85	126.72	6.2			
12	15	201	2.00	115.60	6.4			
14	18	165	2.45	94.61	6.6			
16	20	150	2.70	86.31	6.7			
12	15	201	1.65	75.79	6.4	**FHG042-11N-71-06F FO042-11N-71-06F**	17	160
13	16	183	1.60	69.14	6.5			
15	18	164	2.45	61.98	6.6			
16	20	150	2.65	56.54	6.7			
22	27	109	1.65	41.20	6.8			
27	33	89	2.65	33.69	6.9			
18	22	132	2.45	75.79	6.8	**FH042-11N-71-04E FO042-11N-71-04E**	15	160
20	25	120	2.45	69.14	6.8			
33	41	72	2.45	41.20	7.0			
13	16	186	1.20	70.17	3.9	**FH032-11N-71-06F FO032-11N-71-06F**	16	158
14	17	169	1.35	63.63	4.2			
16	19	151	1.50	57.07	4.4			
17	21	137	1.65	51.75	4.5			
20	24	120	1.85	45.35	4.7			
22	27	109	2.05	41.12	4.8			
26	32	93	2.40	35.03	4.9			
28	35	84	2.65	31.76	4.9			
32	40	74	3.00	27.97	5.0			
33	40	73	1.65	27.67	5.0			
40	49	60	2.50	22.50	5.0			
20	24	122	1.80	70.17	4.7	**FH032-11N-71-04E FO032-11N-71-04E**	13	158
22	27	111	2.00	63.63	4.8			
24	30	99	2.25	57.07	4.8			
26	33	90	2.45	51.75	4.9			
30	37	79	2.80	45.35	5.0			
50	61	48	2.50	27.67	5.1			
15	18	164	0.80	61.80	**	**FH022-11N-71-06F FO022-11N-71-06F**	14	156
16	20	148	0.90	55.64	**			
18	23	129	1.05	48.69	4.7			
21	25	116	1.15	43.83	4.8			
24	30	100	1.35	37.52	5.0			
27	33	90	1.50	33.78	5.0			
31	38	78	1.70	29.32	5.1			
34	42	70	1.90	26.39	5.1			
36	45	66	1.30	24.76	5.1			
41	51	58	2.25	21.89	5.2			
45	55	53	1.60	20.08	5.2			
46	56	52	2.50	19.70	5.2			
55	67	44	3.00	16.48	5.2			
57	70	42	2.05	15.82	5.2			
74	91	32	2.60	12.19	5.2			

Legend see page 107

*** ... on request*

F

P_N = 0.25 kW								IE1
50 Hz 0.25 kW n_{50} min^{-1}	60 Hz 0.30 kW n_{60} min^{-1}	M_2 Nm	f_B	i	at 50 Hz F_{rN} kN	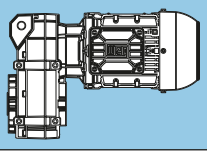	m kg	Dimension sheet see page
14	17	171	0.80	97.85	**	FH022-11N-71-04E FO022-11N-71-04E	11	156
16	19	154	0.85	88.09	**			
18	22	133	1.00	76.22	**			
20	25	120	1.10	68.62	4.8			
22	28	108	1.25	61.80	4.9			
25	31	97	1.35	55.64	5.0			
28	35	85	1.55	48.69	5.0			
31	39	76	1.75	43.83	5.1			
37	45	65	2.00	37.52	5.1			
41	50	59	2.25	33.78	5.2			
43	53	55	1.00	31.79	**			
47	58	51	2.55	29.32	5.2			
52	64	46	2.85	26.39	5.2			
55	69	43	1.95	24.76	5.2			
63	78	38	3.45	21.89	5.2			
68	85	35	2.45	20.08	5.2			
70	86	34	3.80	19.70	5.2			
83	103	29	4.55	16.48	5.2			
87	107	28	3.05	15.82	5.2			
92	115	26	5.05	14.84	5.1			
112	139	21	4.00	12.19	4.8			
113	141	21	6.20	12.09	4.8			
126	156	19	6.90	10.89	4.6			
144	179	17	5.10	9.52	4.4			
193	239	12	6.80	7.11	4.0			
256	318	9.0	9.05	5.35	3.6			
349	433	7.0	10.55	3.93	3.2			

Legend see page 107

*** ... on request*

P_N = 0.37 kW								IE1
50 Hz 0.37 kW n_{50} min^{-1}	60 Hz 0.44 kW n_{60} min^{-1}	M_2 Nm	f_B	i	at 50 Hz F_{rN} kN	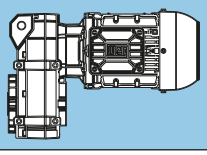	m kg	Dimension sheet see page
2.6	3.2	1377	2.20	358.52	27.6	**FH083-11N-80-06E** **FO083-11N-80-06E**	110	168
3.2	4.0	1090	2.80	283.76	28.3			
2.4	2.9	1480	1.05	385.37	15.7	**FH073-11N-80-06E** **FO073-11N-80-06E**	62	166
3.0	3.7	1173	1.30	305.42	17.6			
3.9	4.8	911	1.65	237.15	18.8			
4.7	5.8	747	2.05	194.58	19.4			
6.1	7.5	579	2.60	150.69	19.8			
3.5	4.4	998	1.55	385.37	18.5	**FH073-11N-71-04F** **FO073-11N-71-04F**	60	166
4.5	5.5	791	1.90	305.42	19.2			
5.8	7.1	614	2.45	237.15	19.7			
7.0	8.7	504	3.00	194.58	20.0			
3.5	4.2	1023	0.85	266.44	**	**FH063-11N-80-06E** **FO063-11N-80-06E**	39	164
3.8	4.6	938	0.90	244.32	**			
4.5	5.5	793	1.05	206.59	8.8			
4.9	6.0	728	1.15	189.44	9.5			
5.4	6.7	649	1.30	169.09	10.2			
5.9	7.3	596	1.40	155.05	10.6			
7.1	8.7	500	1.65	130.15	11.2			
7.7	9.5	458	1.80	119.35	11.4			
9.4	11	378	2.20	98.34	11.8			
10	13	346	2.40	90.17	11.9			
11	14	309	2.70	80.48	12.0			
12	15	283	2.90	73.80	12.1			
3.3	4.1	1068	0.80	412.64	**	**FH063-11N-71-04F** **FO063-11N-71-04F**	37	164
3.6	4.5	979	0.85	378.37	**			
4.0	5.0	874	0.95	337.44	**			
4.4	5.4	801	1.05	309.42	8.8			
5.1	6.3	690	1.20	266.44	9.9			
5.6	6.9	632	1.30	244.32	10.3			
6.6	8.2	535	1.55	206.59	11.0			
7.2	8.9	490	1.70	189.44	11.2			
8.1	10	438	1.90	169.09	11.5			
8.8	11	401	2.05	155.05	11.7			
10	13	337	2.45	130.15	11.9			
11	14	309	2.70	119.35	12.0			
4.9	6.0	718	0.85	187.00	**	**FH053-11N-80-06E** **FO053-11N-80-06E**	23	162
5.4	6.6	656	0.95	170.85	**			
6.3	7.7	561	1.10	146.10	6.7			
6.9	8.5	513	1.20	133.49	7.3			
8.4	10	419	1.45	109.08	8.2			
9.2	11	383	1.60	99.66	8.5			
11	14	315	1.95	82.13	8.9			
12	15	288	2.10	75.04	9.0			
15	19	231	2.60	60.26	9.3			
17	21	211	2.85	55.06	9.4			
4.4	5.5	797	0.80	308.00	**	**FH053-11N-71-04F** **FO053-11N-71-04F**	21	162
4.9	6.0	728	0.85	281.41	**			
5.6	6.9	628	1.00	242.67	**			
6.2	7.6	574	1.05	221.71	6.5			
7.3	9.0	484	1.25	187.00	7.6			
8.0	9.9	442	1.35	170.85	8.0			
9.3	12	378	1.60	146.10	8.5			
10	13	346	1.75	133.49	8.7			
13	15	282	2.15	109.08	9.1			
14	17	258	2.35	99.66	9.2			
17	21	213	2.85	82.13	9.4			
11	13	336	1.15	87.38	8.8	**FH052-11N-80-06E** **FO052-11N-80-06E**	23	162
12	14	307	1.15	79.84	8.9			
13	16	274	1.85	71.46	9.1			
14	17	251	1.85	65.29	9.2			
16	20	217	2.80	56.42	9.3			
19	23	185	1.15	48.15	9.5			
23	29	151	1.85	39.38	9.6			

Legend see page 107

*** ... on request*

F

P_N = 0.37 kW								IE1
50 Hz 0.37 kW n_{50} min^{-1}	60 Hz 0.44 kW n_{60} min^{-1}	M_2 Nm	f_B	i	at 50 Hz F_{rN} kN	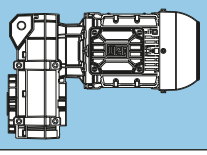	m kg	Dimension sheet see page
16	19	226	1.65	87.38	9.3	**FH052-11N-71-04F** **FO052-11N-71-04F**	21	162
17	21	207	1.65	79.84	9.4			
19	24	185	2.75	71.46	9.5			
21	26	169	2.75	65.29	9.5			
28	35	125	1.65	48.15	9.6			
35	43	102	2.75	39.38	9.7			
7.3	8.9	487	0.85	126.72	**	**FH043-11N-80-06E** **FO043-11N-80-06E**	17	160
8.0	9.8	444	0.95	115.60	**			
9.7	12	363	1.15	94.61	4.5			
11	13	331	1.25	86.31	5.0			
13	16	274	1.50	71.24	5.8			
14	17	250	1.65	64.98	6.0			
18	22	201	2.00	52.27	6.4			
19	24	183	2.20	47.68	6.5			
7.1	8.8	497	0.85	192.00	**	**FH043-11N-71-04F** **FO043-11N-71-04F**	15	160
8.4	10	420	1.00	162.19	**			
9.2	11	383	1.05	147.96	4.2			
11	13	328	1.25	126.72	5.1			
12	15	299	1.35	115.60	5.5			
14	18	245	1.65	94.61	6.0			
16	20	223	1.80	86.31	6.2			
19	24	184	2.20	71.24	6.5			
21	26	168	2.40	64.98	6.6			
26	32	135	3.00	52.27	6.7			
12	15	291	1.15	75.79	5.6	**FH042-11N-80-06E** **FO042-11N-80-06E**	17	160
13	16	266	1.15	69.14	5.8			
15	18	238	1.70	61.98	6.1			
16	20	217	1.85	56.54	6.3			
19	23	188	2.15	48.94	6.5			
21	25	171	2.35	44.64	6.6			
22	27	158	1.15	41.20	6.6			
24	30	146	2.75	37.95	6.7			
27	34	129	1.85	33.69	6.8			
18	22	196	1.65	75.79	6.4	**FH042-11N-71-04F** **FO042-11N-71-04F**	15	160
20	24	179	1.65	69.14	6.5			
22	27	160	2.50	61.98	6.6			
24	30	146	2.75	56.54	6.7			
33	41	107	1.65	41.20	6.9			
41	50	87	2.75	33.69	6.9			
13	16	270	0.85	70.17	**	**FH032-11N-80-06E** **FO032-11N-80-06E**	16	158
14	18	244	0.95	63.63	**			
16	20	219	1.05	57.07	3.4			
18	22	199	1.15	51.75	3.8			
20	25	174	1.30	45.35	4.1			
22	27	158	1.40	41.12	4.3			
26	32	135	1.65	35.03	4.6			
29	36	122	1.85	31.76	4.7			
33	40	107	2.05	27.97	4.8			
36	45	97	2.30	25.36	4.8			
41	50	86	1.75	22.50	4.9			
44	53	81	2.75	21.14	4.9			
48	59	74	3.00	19.17	5.0			
51	63	69	2.20	17.88	5.0			
67	82	53	2.85	13.81	5.1			

Legend see page 107

*** ... on request*

P_N = 0.37 kW								IE1
50 Hz 0.37 kW n_{50} min^{-1}	60 Hz 0.44 kW n_{60} min^{-1}	M_2 Nm	f_B	i	at 50 Hz F_{rN} kN	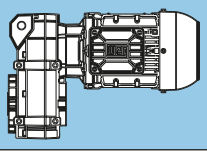	m kg	Dimension sheet see page
19	24	182	1.25	70.17	4.0	**FH032-11N-71-04F FO032-11N-71-04F**	14	158
21	26	165	1.35	63.63	4.2			
24	30	148	1.50	57.07	4.4			
26	33	134	1.65	51.75	4.6			
30	37	117	1.90	45.35	4.7			
33	41	106	2.10	41.12	4.8			
39	48	91	2.45	35.03	4.9			
43	53	82	2.70	31.76	4.9			
49	61	72	1.70	27.67	5.0			
61	75	58	2.55	22.50	5.0			
59	71	60	2.45	22.50	5.0			
21	26	168	0.80	43.83	**	**FH022-11N-80-06E FO022-11N-80-06E**	13	156
25	30	144	0.95	37.52	**			
27	33	130	1.05	33.78	4.7			
31	39	113	1.20	29.32	4.9			
35	43	101	1.30	26.39	4.9			
37	46	95	0.90	24.76	**			
42	52	84	1.55	21.89	5.0			
46	56	77	1.10	20.08	5.1			
47	57	76	1.75	19.70	5.1			
56	69	63	2.10	16.48	5.1			
58	71	61	1.40	15.82	5.1			
62	76	57	2.30	14.84	5.2			
75	93	47	1.80	12.19	5.2			
76	93	46	2.80	12.09	5.2			
97	119	37	2.30	9.52	5.1			
22	27	160	0.85	61.80	**	**FH022-11N-71-04F FO022-11N-71-04F**	11	156
25	30	144	0.95	55.64	**			
28	35	126	1.05	48.69	4.8			
31	38	113	1.15	43.83	4.9			
36	45	97	1.35	37.52	5.0			
40	50	87	1.50	33.78	5.0			
47	57	76	1.75	29.32	5.1			
52	64	68	1.95	26.39	5.1			
55	68	64	1.35	24.76	5.1			
62	77	57	2.30	21.89	5.2			
68	84	52	1.65	20.08	5.2			
69	86	51	2.55	19.70	5.2			
83	102	43	3.05	16.48	5.2			
86	107	41	2.10	15.82	5.2			
92	114	38	3.40	14.84	5.2			
112	138	32	2.70	12.19	4.9			
113	139	31	4.20	12.09	4.9			
125	155	28	4.65	10.89	4.7			
143	177	25	3.45	9.52	4.4			
192	237	18	4.60	7.11	4.0			
255	315	14	6.10	5.35	3.6			
347	429	10	7.10	3.93	3.3			

Legend see page 107

*** ... on request*

F

P_N = 0.55 kW								IE1
50 Hz 0.55 kW n_{50} min^{-1}	60 Hz 0.66 kW n_{60} min^{-1}	M_2 Nm	f_B	i	at 50 Hz F_{rN} kN	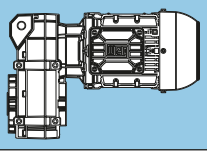	m kg	Dimension sheet see page
3.2	4.0	1629	2.80	288.50	38.6	**FH093-11N-80-06F** **FO093-11N-80-06F**	164	170
2.6	3.2	2025	1.50	358.52	25.4			
3.3	4.0	1603	1.90	283.76	27.0			
3.8	4.6	1399	2.15	247.77	27.6	**FH083-11N-80-06F** **FO083-11N-80-06F**	110	168
4.2	5.2	1237	2.45	218.97	28.0			
5.0	6.2	1046	2.90	185.17	28.4			
5.2	6.3	1018	2.95	180.28	28.5			
3.9	4.8	1331	2.30	358.52	27.7	**FH083-11N-80-04E** **FO083-11N-80-04E**	109	168
5.0	6.1	1053	2.85	283.76	28.4			
3.0	3.7	1725	0.90	305.42	**			
3.9	4.8	1339	1.15	237.15	16.7			
4.8	5.9	1099	1.40	194.58	18.0	**FH073-11N-80-06F** **FO073-11N-80-06F**	62	166
6.2	7.6	851	1.80	150.69	19.0			
8.1	9.9	647	2.35	114.62	19.6			
9.8	12	534	2.85	94.52	19.9			
3.7	4.5	1430	1.05	385.37	16.1			
4.6	5.6	1134	1.35	305.42	17.8	**FH073-11N-80-04E** **FO073-11N-80-04E**	62	166
6.0	7.3	880	1.75	237.15	18.9			
7.3	8.9	722	2.10	194.58	19.4			
9.4	11	559	2.70	150.69	19.9			
4.9	6.0	1070	0.80	189.44	**			
5.5	6.7	955	0.90	169.09	**			
6.0	7.4	876	0.95	155.05	**			
7.1	8.8	735	1.15	130.15	9.4			
7.8	9.6	674	1.25	119.35	10.0			
9.5	12	555	1.50	98.34	10.8			
10	13	509	1.65	90.17	11.1	**FH063-11N-80-06F** **FO063-11N-80-06F**	39	164
12	14	455	1.85	80.48	11.4			
13	15	417	2.00	73.80	11.6			
14	17	369	2.25	65.26	11.8			
16	19	338	2.45	59.84	11.9			
17	21	309	2.70	54.63	12.0			
19	23	283	2.90	50.10	12.1			
5.3	6.5	989	0.85	266.44	**			
5.8	7.1	907	0.95	244.32	**			
6.8	8.3	767	1.10	206.59	9.1			
7.5	9.1	703	1.20	189.44	9.7			
8.4	10	628	1.35	169.09	10.4			
9.1	11	576	1.45	155.05	10.7	**FH063-11N-80-04E** **FO063-11N-80-04E**	39	164
11	13	483	1.70	130.15	11.3			
12	14	443	1.90	119.35	11.5			
14	18	365	2.25	98.34	11.8			
16	19	335	2.45	90.17	11.9			
18	21	299	2.75	80.48	12.0			
19	23	274	3.00	73.80	12.1			
19	23	281	2.95	49.67	12.1	**FH062-11N-80-06F** **FO062-11N-80-06F**	38	164
7.0	8.5	754	0.80	133.49	**			
8.5	10	616	1.00	109.08	**			
9.3	11	563	1.10	99.66	6.6			
11	14	464	1.30	82.13	7.8	**FH053-11N-80-06F** **FO053-11N-80-06F**	23	162
12	15	424	1.45	75.04	8.1			
15	19	340	1.80	60.26	8.7			
17	21	311	1.95	55.06	8.9			
7.6	9.2	694	0.90	187.00	**			
8.3	10	634	0.95	170.85	**			
9.7	12	542	1.15	146.10	6.9			
11	13	496	1.25	133.49	7.5			
13	16	405	1.50	109.08	8.3	**FH053-11N-80-04E** **FO053-11N-80-04E**	23	162
14	17	370	1.65	99.66	8.5			
17	21	305	2.00	82.13	8.9			
19	23	279	2.15	75.04	9.1			
23	29	224	2.70	60.26	9.3			
26	31	204	2.95	55.06	9.4			

P_N = 0.55 kW								IE1
50 Hz 0.55 kW n_{50} min^{-1}	60 Hz 0.66 kW n_{60} min^{-1}	M_2 Nm	f_B	i	at 50 Hz F_{rN} kN	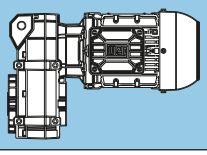	m kg	Dimension sheet see page
11	13	494	0.80	87.38	**	**FH052-11N-80-06F FO052-11N-80-06F**	23	162
12	14	451	0.80	79.84	**			
13	16	404	1.25	71.46	8.3			
14	17	369	1.25	65.29	8.6			
16	20	319	1.90	56.42	8.9			
18	22	291	2.10	51.55	9.0			
19	24	272	0.80	48.15	**			
21	26	247	2.45	43.75	9.2			
23	29	226	2.65	39.97	9.3			
24	29	222	1.25	39.38	9.3			
26	32	202	3.00	35.81	9.4			
30	37	176	2.10	31.09	9.5			
39	47	136	2.65	24.11	9.6			
16	20	324	1.15	87.38	8.8	**FH052-11N-80-04E FO052-11N-80-04E**	23	162
18	22	296	1.15	79.84	9.0			
20	24	265	1.90	71.46	9.1			
22	26	242	1.90	65.29	9.2			
25	31	209	2.90	56.42	9.4			
29	36	179	1.15	48.15	9.5			
36	44	146	1.90	39.38	9.6			
11	13	487	0.85	86.31	**	**FH043-11N-80-06F FO043-11N-80-06F**	17	160
13	16	402	1.00	71.24	**			
14	18	367	1.10	64.98	4.5			
18	22	295	1.40	52.27	5.5			
20	24	269	1.50	47.68	5.8			
11	14	470	0.90	126.72	**	**FH043-11N-80-04E FO043-11N-80-04E**	17	160
12	15	429	0.95	115.60	**			
15	18	351	1.15	94.61	4.7			
16	20	320	1.25	86.31	5.2			
20	24	264	1.55	71.24	5.8			
22	27	241	1.70	64.98	6.1			
27	33	194	2.10	52.27	6.4			
30	36	177	2.30	47.68	6.5			
12	15	428	0.80	75.79	**	**FH042-11N-80-06F FO042-11N-80-06F**	17	160
13	16	390	0.80	69.14	**			
15	18	350	1.15	61.98	4.8			
16	20	319	1.25	56.54	5.2			
19	23	276	1.45	48.94	5.7			
21	26	252	1.60	44.64	6.0			
23	28	233	0.80	41.20	**			
25	30	214	1.90	37.95	6.3			
27	33	196	2.05	34.62	6.4			
28	34	190	1.25	33.69	6.4			
30	37	175	2.30	31.06	6.5			
33	40	160	2.50	28.33	6.6			
35	43	150	2.10	26.60	6.7			
39	48	135	3.00	23.91	6.7			
45	55	117	2.65	20.63	6.8			
19	23	281	1.15	75.79	5.7	**FH042-11N-80-04E FO042-11N-80-04E**	17	160
20	25	257	1.15	69.14	5.9			
23	28	230	1.75	61.98	6.2			
25	31	210	1.90	56.54	6.3			
29	35	182	2.25	48.94	6.5			
32	39	166	2.45	44.64	6.6			
34	42	153	1.15	41.20	6.7			
37	45	141	2.85	37.95	6.7			
42	51	125	1.90	33.69	6.8			

Legend see page 107

*** ... on request*

P_N = 0.55 kW								IE1
50 Hz 0.55 kW n_{50} min^{-1}	60 Hz 0.66 kW n_{60} min^{-1}	M_2 Nm	f_B	i	at 50 Hz F_{rN} kN	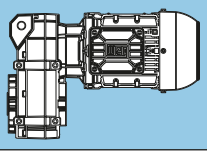	m kg	Dimension sheet see page
18	22	292	0.80	51.75	**	**FH032-11N-80-06F** **FO032-11N-80-06F**	16	158
21	25	256	0.90	45.35	**			
23	28	232	0.95	41.12	**			
27	33	198	1.15	35.03	3.8			
29	36	179	1.25	31.76	4.0			
33	41	158	1.40	27.97	4.3			
34	41	156	0.80	27.67	**			
37	45	143	1.55	25.36	4.5			
41	51	127	1.20	22.50	4.6			
44	54	119	1.85	21.14	4.7			
49	59	108	2.05	19.17	4.8			
52	64	101	1.50	17.88	4.8			
58	71	91	2.45	16.06	4.9			
64	78	82	2.65	14.57	4.9			
67	83	78	1.95	13.81	5.0			
74	91	71	2.90	12.50	5.0			
84	103	62	2.45	11.03	5.0			
20	25	260	0.85	70.17	**	**FH032-11N-80-04E** **FO032-11N-80-04E**	15	158
22	27	236	0.95	63.63	**			
25	30	212	1.05	57.07	3.5			
27	33	192	1.15	51.75	3.9			
31	38	168	1.35	45.35	4.2			
34	42	153	1.45	41.12	4.4			
40	49	130	1.70	35.03	4.6			
45	54	118	1.90	31.76	4.7			
51	62	104	2.15	27.97	4.8			
56	68	94	2.35	25.36	4.9			
63	77	84	1.80	22.50	4.9			
67	82	78	2.85	21.14	5.0			
79	96	66	2.30	17.88	5.0			
102	125	51	2.95	13.81	5.1			
32	39	166	0.80	29.32	**	**FH022-11N-80-06F** **FO022-11N-80-06F**	13	156
35	43	149	0.90	26.39	**			
42	52	124	1.10	21.89	4.8			
47	58	111	1.20	19.70	4.9			
56	69	93	1.40	16.48	5.0			
59	72	89	0.95	15.82	**			
63	77	84	1.60	14.84	5.0			
76	94	69	1.25	12.19	5.1			
77	94	68	1.95	12.09	5.1			
85	105	62	2.15	10.89	5.1			
98	120	54	1.60	9.52	5.2			
131	160	40	2.10	7.11	4.7			
174	213	30	2.80	5.35	4.2			
32	39	163	0.80	43.83	**	**FH022-11N-80-04E** **FO022-11N-80-04E**	13	156
38	46	139	0.95	37.52	**			
42	51	125	1.05	33.78	4.8			
48	59	109	1.20	29.32	4.9			
54	65	98	1.35	26.39	5.0			
57	70	92	0.95	24.76	**			
65	79	81	1.60	21.89	5.1			
70	86	75	1.15	20.08	5.1			
72	88	73	1.80	19.70	5.1			
86	105	61	2.15	16.48	5.1			
89	109	59	1.45	15.82	5.2			
95	116	55	2.40	14.84	5.2			
116	142	45	1.90	12.19	4.9			
117	143	45	2.90	12.09	4.9			
130	158	40	3.25	10.89	4.7			
149	181	35	2.40	9.52	4.5			
199	243	26	3.20	7.11	4.0			
264	322	20	4.25	5.35	3.6			
360	439	15	4.95	3.93	3.2			

Legend see page 107

*** ... on request*

P_N = 0.75 kW								IE3
50 Hz 0.75 kW n_{50} min^{-1}	60 Hz 0.90 kW n_{60} min^{-1}	M_2 Nm	f_B	i	at 50 Hz F_{rN} kN	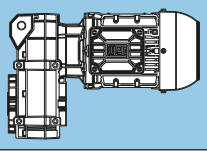	m kg	Dimension sheet see page
3.3	4.0	2198	2.05	288.50	37.4	**FH093-11P-90S/L-06E FO093-11P-90S/L-06E**	175	170
3.9	4.7	1858	2.45	243.90	38.1			
4.5	5.4	1609	2.80	211.14	38.6			
2.6	3.2	2732	1.10	358.52	21.4	**FH083-11P-90S/L-06E FO083-11P-90S/L-06E**	120	168
3.3	4.0	2162	1.40	283.76	24.7			
3.8	4.6	1888	1.60	247.77	25.9			
4.3	5.2	1668	1.80	218.97	26.7			
5.1	6.2	1411	2.15	185.17	27.5			
5.2	6.4	1374	2.20	180.28	27.6			
5.9	7.2	1213	2.50	159.17	28.0			
6.6	8.0	1087	2.80	142.69	28.3			
6.8	8.2	1059	2.85	138.95	28.4			
4.0	4.8	1808	1.70	358.52	26.2	**FH083-11P-80-04F FO083-11P-80-04F**	111	168
5.0	6.1	1431	2.10	283.76	27.5			
5.7	6.9	1250	2.45	247.77	28.0			
6.5	7.9	1104	2.75	218.97	28.3			
4.0	4.8	1807	0.85	237.15	**	**FH073-11P-90S/L-06E FO073-11P-90S/L-06E**	73	166
4.8	5.9	1483	1.05	194.58	15.7			
6.2	7.6	1148	1.35	150.69	17.8			
8.2	10	873	1.75	114.62	18.9			
9.9	12	720	2.10	94.52	19.4			
12	15	591	2.55	77.53	19.8			
14	17	502	3.00	65.88	20.0			
3.7	4.5	1944	0.80	385.37	**	**FH073-11P-80-04F FO073-11P-80-04F**	64	166
4.6	5.6	1541	1.00	305.42	**			
6.0	7.3	1196	1.30	237.15	17.5			
7.3	8.8	981	1.55	194.58	18.5			
9.4	11	760	2.00	150.69	19.3			
12	15	578	2.60	114.62	19.8			
7.2	8.8	992	0.85	130.15	**	**FH063-11P-90S/L-06E FO063-11P-90S/L-06E**	50	164
7.9	9.6	909	0.95	119.35	**			
9.6	12	749	1.10	98.34	9.3			
10	13	687	1.20	90.17	9.9			
12	14	613	1.35	80.48	10.5			
13	16	562	1.50	73.80	10.8			
14	18	497	1.65	65.26	11.2			
16	19	456	1.80	59.84	11.4			
17	21	416	2.00	54.63	11.6			
19	23	382	2.15	50.10	11.7			
6.9	8.3	1042	0.80	206.59	**	**FH063-11P-80-04F FO063-11P-80-04F**	41	164
7.5	9.1	956	0.90	189.44	**			
8.4	10	853	1.00	169.09	**			
9.2	11	782	1.05	155.05	9.0			
11	13	656	1.25	130.15	10.1			
12	14	602	1.40	119.35	10.5			
14	17	496	1.70	98.34	11.2			
16	19	455	1.85	90.17	11.4			
18	21	406	2.05	80.48	11.6			
19	23	372	2.25	73.80	11.8			
22	26	329	2.50	65.26	11.9			
24	29	302	2.75	59.84	12.0			
26	31	276	3.00	54.63	12.1			
19	23	378	2.20	49.67	11.7	**FH062-11P-90S/L-06E FO062-11P-90S/L-06E**	49	164
21	25	347	2.40	45.55	11.9			
23	27	317	2.60	41.66	12.0			
25	30	291	2.85	38.20	12.0			
46	56	156	2.75	20.49	12.4			

Legend see page 107

*** ... on request*

P_N = 0.75 kW								IE3
50 Hz 0.75 kW n_{50} min^{-1}	60 Hz 0.90 kW n_{60} min^{-1}	M_2 Nm	f_B	i	at 50 Hz F_{rN} kN	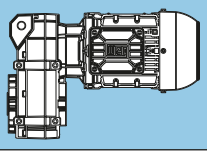	m kg	Dimension sheet see page
9.4	11	759	0.80	99.66	**	FH053-11P-90S/L-06E FO053-11P-90S/L-06E	33	162
11	14	626	1.00	82.13	**			
13	15	572	1.05	75.04	6.5			
16	19	459	1.35	60.26	7.8			
17	21	420	1.45	55.06	8.2			
9.7	12	737	0.85	146.10	**	FH053-11P-80-04F FO053-11P-80-04F	24	162
11	13	673	0.90	133.49	**			
13	16	550	1.10	109.08	6.8			
14	17	503	1.20	99.66	7.4			
17	21	414	1.45	82.13	8.2			
19	23	379	1.60	75.04	8.5			
24	29	304	2.00	60.26	9.0			
26	31	278	2.15	55.06	9.1			
13	16	545	0.95	71.46	**	FH052-11P-90S/L-06E FO052-11P-90S/L-06E	33	162
14	18	497	0.95	65.29	**			
17	20	430	1.40	56.42	8.1			
18	22	393	1.55	51.55	8.4			
21	26	333	1.80	43.75	8.8			
24	29	305	2.00	39.97	8.9			
26	32	273	2.20	35.81	9.1			
29	35	249	2.40	32.72	9.2			
30	37	237	1.55	31.09	9.3			
34	42	210	2.90	27.56	9.4			
39	47	184	2.00	24.11	9.5			
48	58	150	2.40	19.73	9.6			
16	20	441	0.85	87.38	**	FH052-11P-80-04F FO052-11P-80-04F	24	162
18	22	403	0.85	79.84	**			
20	24	360	1.40	71.46	8.6			
22	26	329	1.40	65.29	8.8			
25	30	285	2.15	56.42	9.1			
28	33	260	2.30	51.55	9.2			
29	36	243	0.85	48.15	**			
32	39	221	2.75	43.75	9.3			
36	43	202	3.00	39.97	9.4			
46	55	157	2.30	31.09	9.5			
59	71	122	3.00	24.11	9.6			
14	18	495	0.85	64.98	**	FH043-11P-90S/L-06E FO043-11P-90S/L-06E	28	160
18	22	398	1.05	52.27	3.8			
20	24	363	1.15	47.68	4.5			
15	18	477	0.85	94.61	**	FH043-11P-80-04F FO043-11P-80-04F	19	160
16	20	435	0.95	86.31	**			
20	24	359	1.15	71.24	4.6			
22	26	328	1.25	64.98	5.1			
27	33	264	1.55	52.27	5.9			
30	36	240	1.70	47.68	6.1			
15	18	472	0.85	61.98	**	FH042-11P-90S/L-06E FO042-11P-90S/L-06E	28	160
17	20	431	0.95	56.54	**			
19	23	373	1.10	48.94	4.4			
21	26	340	1.20	44.64	4.9			
25	30	289	1.40	37.95	5.6			
27	33	264	1.55	34.62	5.9			
28	34	257	0.95	33.69	**			
30	37	237	1.70	31.06	6.1			
33	40	216	1.90	28.33	6.3			
35	43	203	1.55	26.60	6.4			
39	48	182	2.20	23.91	6.5			
43	52	166	2.45	21.81	6.6			
46	56	157	2.00	20.63	6.6			
52	63	138	2.95	18.06	6.7			
56	68	129	2.40	16.88	6.8			

Legend see page 107

*** ... on request*

P_N = 0.75 kW								IE3
50 Hz 0.75 kW n_{50} min^{-1}	60 Hz 0.90 kW n_{60} min^{-1}	M_2 Nm	f_B	i	at 50 Hz F_{rN} kN	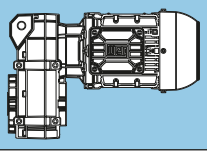	m kg	Dimension sheet see page
19	23	382	0.85	75.79	**	**FH042-11P-80-04F** **FO042-11P-80-04F**	19	160
21	25	349	0.85	69.14	**			
23	28	313	1.30	61.98	5.3			
25	30	285	1.40	56.54	5.6			
29	35	247	1.65	48.94	6.0			
32	39	225	1.80	44.64	6.2			
34	42	208	0.85	41.20	**			
37	45	191	2.10	37.95	6.4			
41	50	175	2.30	34.62	6.5			
42	51	170	1.40	33.69	6.6			
46	55	157	2.60	31.06	6.6			
50	61	143	2.80	28.33	6.7			
53	65	134	2.30	26.60	6.7			
69	83	104	3.00	20.63	6.9			
27	33	267	0.85	35.03	**	**FH032-11P-90S/L-06E** **FO032-11P-90S/L-06E**	26	158
30	36	242	0.95	31.76	**			
34	41	213	1.05	27.97	3.5			
37	45	193	1.15	25.36	3.8			
42	51	171	0.90	22.50	**			
44	54	161	1.40	21.14	4.3			
49	60	146	1.55	19.17	4.4			
53	64	136	1.15	17.88	4.5			
59	71	122	1.80	16.06	4.7			
65	79	111	1.95	14.57	4.8			
68	83	105	1.45	13.81	4.8			
75	92	95	2.15	12.50	4.9			
83	101	86	2.30	11.33	4.9			
85	104	84	1.80	11.03	4.9			
96	117	74	2.55	9.76	5.0			
106	129	67	2.70	8.85	5.0			
113	137	63	2.40	8.33	5.0			
148	181	48	2.95	6.33	5.1			
25	30	288	0.80	57.07	**	**FH032-11P-80-04F** **FO032-11P-80-04F**	17	158
27	33	261	0.85	51.75	**			
31	38	229	1.00	45.35	**			
35	42	207	1.10	41.12	3.6			
41	49	177	1.25	35.03	4.1			
45	54	160	1.40	31.76	4.3			
51	61	141	1.60	27.97	4.5			
56	68	128	1.75	25.36	4.6			
63	76	113	1.30	22.50	4.7			
67	81	107	2.10	21.14	4.8			
74	90	97	2.30	19.17	4.9			
79	96	90	1.70	17.88	4.9			
88	107	81	2.75	16.06	4.9			
97	118	73	2.95	14.57	5.0			
103	125	70	2.20	13.81	5.0			
129	156	56	2.70	11.03	5.1			
43	52	167	0.80	21.89	**	**FH022-11P-90S/L-06E** **FO022-11P-90S/L-06E**	24	156
48	58	150	0.90	19.70	**			
57	69	126	1.05	16.48	4.8			
63	77	113	1.15	14.84	4.9			
77	94	93	0.95	12.19	**			
78	95	92	1.45	12.09	5.0			
86	105	83	1.60	10.89	5.0			
99	120	73	1.20	9.52	5.1			
132	161	54	1.60	7.11	4.8			
176	214	41	2.10	5.35	4.3			
239	291	30	2.45	3.93	3.8			

Legend see page 107

*** ... on request*

F

P_N = 0.75 kW								IE3
50 Hz 0.75 kW n_{50} min^{-1}	60 Hz 0.90 kW n_{60} min^{-1}	M_2 Nm	f_B	i	at 50 Hz F_{rN} kN	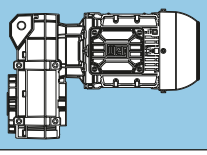	m kg	Dimension sheet see page
42	51	170	0.80	33.78	**	**FH022-11P-80-04F** **FO022-11P-80-04F**	15	156
48	59	148	0.90	29.32	**			
54	65	133	1.00	26.39	**			
65	79	110	1.20	21.89	4.9			
71	86	101	0.85	20.08	**			
72	87	99	1.35	19.70	5.0			
86	104	83	1.60	16.48	5.0			
90	109	80	1.10	15.82	5.1			
96	116	75	1.75	14.84	5.1			
116	141	61	1.40	12.19	5.0			
117	142	61	2.15	12.09	5.0			
130	158	55	2.40	10.89	4.8			
149	181	48	1.75	9.52	4.5			
200	242	36	2.35	7.11	4.1			
265	321	27	3.15	5.35	3.7			
361	438	20	3.65	3.93	3.3			

F

Legend see page 107

*** ... on request*

P_N = 1.1 kW								IE3
50 Hz 1.1 kW n_{50} min^{-1}	60 Hz 1.3 kW n_{60} min^{-1}	M_2 Nm	f_B	i	at 50 Hz F_{rN} kN	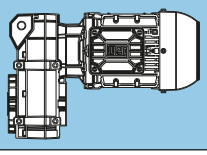	m kg	Dimension sheet see page
5.0	6.1	2083	2.20	288.50	37.7	**FH093-11P-90S/L-04E** **FO093-11P-90S/L-04E**	172	170
6.0	7.2	1761	2.60	243.90	38.3			
6.9	8.3	1524	3.00	211.14	38.7			
3.3	4.0	3207	1.45	288.50	34.4	**FH093-11P-100L-06D** **FO093-11P-100L-06D**	183	170
3.9	4.7	2711	1.70	243.90	36.0			
4.5	5.4	2347	1.95	211.14	37.0			
5.1	6.2	2079	2.20	186.99	37.7			
5.8	7.1	1798	2.55	161.76	38.3			
6.6	8.1	1588	2.85	142.85	38.6			
6.9	8.4	1530	2.95	137.63	38.7			
4.1	4.9	2588	1.20	358.52	22.4	**FH083-11P-90S/L-04E** **FO083-11P-90S/L-04E**	118	168
5.1	6.2	2049	1.50	283.76	25.2			
5.9	7.1	1789	1.70	247.77	26.3			
6.6	8.0	1581	1.90	218.97	27.0			
7.9	9.5	1337	2.25	185.17	27.7			
8.1	9.8	1302	2.35	180.28	27.8			
9.1	11	1149	2.65	159.17	28.2			
10	13	1003	3.00	138.95	28.5			
2.6	3.2	3985	0.80	358.52	**	**FH083-11P-100L-06D** **FO083-11P-100L-06D**	129	168
3.3	4.1	3154	1.00	283.76	**			
3.8	4.6	2754	1.10	247.77	21.3			
4.3	5.3	2434	1.25	218.97	23.3			
5.1	6.2	2058	1.50	185.17	25.2			
5.2	6.4	2004	1.50	180.28	25.4			
5.9	7.2	1769	1.70	159.17	26.4			
6.6	8.1	1586	1.90	142.69	27.0			
6.8	8.3	1545	1.95	138.95	27.1			
7.6	9.2	1385	2.20	124.59	27.6			
7.9	9.7	1323	2.30	119.05	27.8			
8.6	10	1224	2.50	110.11	28.0			
9.3	11	1126	2.70	101.32	28.2			
10	12	1035	2.90	93.11	28.4			
6.1	7.4	1712	0.90	237.15	**	**FH073-11P-90S/L-04E** **FO073-11P-90S/L-04E**	70	166
7.5	9.0	1405	1.10	194.58	16.2			
9.7	12	1088	1.40	150.69	18.1			
13	15	828	1.85	114.62	19.1			
15	19	682	2.20	94.52	19.6			
19	23	560	2.70	77.53	19.9			
6.3	7.6	1675	0.90	150.69	**	**FH073-11P-100L-06D** **FO073-11P-100L-06D**	81	166
8.2	10	1274	1.20	114.62	17.1			
10	12	1051	1.45	94.52	18.2			
12	15	862	1.75	77.53	19.0			
14	17	732	2.05	65.88	19.4			
17	21	602	2.50	54.16	19.8			
21	26	500	3.00	45.02	20.0	**FH072-11P-100L-06D** **FO072-11P-100L-06D**	80	166
11	14	940	0.90	130.15	**	**FH063-11P-90S/L-04E** **FO063-11P-90S/L-04E**	47	164
12	15	862	1.00	119.35	**			
15	18	710	1.20	98.34	9.7			
16	20	651	1.30	90.17	10.2			
18	22	581	1.45	80.48	10.7			
20	24	533	1.55	73.80	11.0			
22	27	471	1.75	65.26	11.3			
24	29	432	1.90	59.84	11.5			
27	32	394	2.10	54.63	11.7			
29	35	362	2.30	50.10	11.8			

Legend see page 107

*** ... on request*

F

P_N = 1.1 kW								IE3
50 Hz 1.1 kW n_{50} min^{-1}	60 Hz 1.3 kW n_{60} min^{-1}	M_2 Nm	f_B	i	at 50 Hz F_{rN} kN	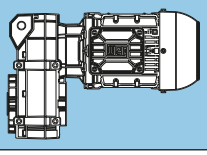	m kg	Dimension sheet see page
9.6	12	1093	0.80	98.34	**	**FH063-11P-100L-06D** **FO063-11P-100L-06D**	58	164
10	13	1002	0.85	90.17	**			
12	14	895	0.95	80.48	**			
13	16	820	1.00	73.80	**			
14	18	725	1.15	65.26	9.5			
16	19	665	1.25	59.84	10.1			
17	21	607	1.40	54.63	10.5			
19	23	557	1.50	50.10	10.8			
29	35	359	2.30	49.67	11.8	**FH062-11P-90S/L-04E** **FO062-11P-90S/L-04E**	46	164
32	39	329	2.50	45.55	11.9			
35	42	301	2.75	41.66	12.0			
38	46	276	3.00	38.20	12.1			
71	86	148	2.90	20.49	12.4			
19	23	552	1.50	49.67	10.9	**FH062-11P-100L-06D** **FO062-11P-100L-06D**	57	164
21	25	506	1.65	45.55	11.1			
23	28	463	1.80	41.66	11.4			
25	30	425	1.95	38.20	11.6			
29	35	363	2.30	32.69	11.8			
32	38	333	2.50	29.98	11.9			
37	46	280	2.95	25.23	12.1			
46	56	228	1.90	20.49	12.2			
55	67	191	3.00	17.18	12.3			
13	16	788	0.80	109.08	**	**FH053-11P-90S/L-04E** **FO053-11P-90S/L-04E**	31	162
15	18	720	0.85	99.66	**			
18	21	593	1.05	82.13	6.2			
19	23	542	1.15	75.04	6.9			
24	29	435	1.40	60.26	8.0			
26	32	398	1.55	55.06	8.3			
20	25	516	1.00	71.46	**	**FH052-11P-90S/L-04E** **FO052-11P-90S/L-04E**	31	162
22	27	471	1.00	65.29	**			
26	31	407	1.50	56.42	8.3			
28	34	372	1.65	51.55	8.5			
33	40	316	1.90	43.75	8.9			
36	44	289	2.10	39.97	9.0			
37	45	284	1.00	39.38	**			
41	49	259	2.35	35.81	9.2			
44	54	236	2.55	32.72	9.3			
47	57	224	1.65	31.09	9.3			
60	73	174	2.10	24.11	9.5			
74	89	142	2.55	19.73	9.6			
17	20	627	1.00	56.42	**	**FH052-11P-100L-06D** **FO052-11P-100L-06D**	42	162
18	22	573	1.05	51.55	6.5			
22	26	486	1.25	43.75	7.5			
24	29	444	1.35	39.97	8.0			
26	32	398	1.55	35.81	8.3			
29	35	364	1.65	32.72	8.6			
30	37	346	1.05	31.09	8.7			
34	42	306	2.00	27.56	8.9			
38	46	280	2.15	25.18	9.1			
39	48	268	1.35	24.11	9.1			
45	55	232	2.60	20.83	9.3			
48	58	219	1.65	19.73	9.3			
50	60	212	2.85	19.03	9.4			
62	76	169	2.15	15.19	9.5			
82	100	128	2.85	11.48	9.6			
20	25	514	0.80	71.24	**	**FH043-11P-90S/L-04E** **FO043-11P-90S/L-04E**	25	160
22	27	469	0.90	64.98	**			
28	34	377	1.10	52.27	4.3			
31	37	344	1.20	47.68	4.9			

Legend see page 107

*** ... on request*

P_N = 1.1 kW								IE3
50 Hz 1.1 kW n_{50} min^{-1}	60 Hz 1.3 kW n_{60} min^{-1}	M_2 Nm	f_B	i	at 50 Hz F_{rN} kN	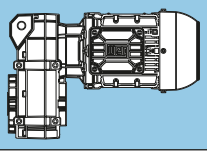	m kg	Dimension sheet see page
20	24	530	0.80	47.68	**	**FH043-11P-100L-06D** **FO043-11P-100L-06D**	36	160
23	28	447	0.90	61.98	**	**FH042-11P-90S/L-04E** **FO042-11P-90S/L-04E**	25	160
26	31	408	1.00	56.54	**			
30	36	353	1.15	48.94	4.7			
33	39	322	1.25	44.64	5.2			
38	46	274	1.50	37.95	5.8			
42	51	250	1.65	34.62	6.0			
43	52	243	1.00	33.69	**			
47	57	224	1.80	31.06	6.2			
51	62	205	2.00	28.33	6.4			
55	66	192	1.65	26.60	6.4			
61	74	173	2.35	23.91	6.6			
67	81	157	2.55	21.81	6.6			
71	85	149	2.10	20.63	6.7			
86	104	122	2.55	16.88	6.8			
21	26	496	0.85	44.64	**	**FH042-11P-100L-06D** **FO042-11P-100L-06D**	36	160
25	30	422	0.95	37.95	**			
27	33	385	1.05	34.62	4.1			
30	37	345	1.20	31.06	4.8			
33	41	315	1.30	28.33	5.3			
36	43	296	1.05	26.60	5.5			
40	48	266	1.55	23.91	5.8			
43	53	242	1.65	21.81	6.1			
46	56	229	1.35	20.63	6.2			
52	64	201	2.00	18.06	6.4			
56	68	188	1.65	16.88	6.5			
57	70	183	2.20	16.48	6.5			
64	78	164	2.45	14.78	6.6			
70	85	150	2.70	13.48	6.7			
73	89	144	2.15	12.99	6.7			
96	117	109	2.85	9.82	6.8			
42	50	253	0.90	35.03	**	**FH032-11P-90S/L-04E** **FO032-11P-90S/L-04E**	24	158
46	55	229	1.00	31.76	**			
52	63	202	1.10	27.97	3.7			
57	69	183	1.25	25.36	4.0			
65	78	162	0.95	22.50	**			
69	83	153	1.45	21.14	4.4			
76	92	138	1.60	19.17	4.5			
81	98	129	1.20	17.88	4.6			
91	110	116	1.90	16.06	4.7			
100	121	105	2.05	14.57	4.8			
105	127	100	1.55	13.81	4.8			
116	141	90	2.25	12.50	4.9			
128	155	82	2.45	11.33	4.9			
132	160	80	1.90	11.03	5.0			
149	180	70	2.70	9.76	5.0			
164	199	64	2.85	8.85	5.0			
175	211	60	2.50	8.33	5.0			

Legend see page 107

*** ... on request*

P_N = 1.1 kW								IE3
50 Hz 1.1 kW n_{50} min^{-1}	60 Hz 1.3 kW n_{60} min^{-1}	M_2 Nm	f_B	i	at 50 Hz F_{rN} kN	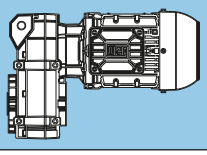	m kg	Dimension sheet see page
37	45	282	0.80	25.36	**	**FH032-11P-100L-06D** **FO032-11P-100L-06D**	35	158
45	54	235	0.95	21.14	**			
49	60	213	1.05	19.17	3.5			
53	64	199	0.80	17.88	**			
59	72	179	1.25	16.06	4.1			
65	79	162	1.35	14.57	4.3			
68	83	154	1.00	13.81	**			
76	92	139	1.50	12.50	4.5			
83	102	126	1.60	11.33	4.6			
86	104	123	1.25	11.03	4.7			
97	118	108	1.75	9.76	4.8			
107	130	98	1.85	8.85	4.8			
113	138	93	1.65	8.33	4.9			
149	182	70	2.05	6.33	5.0			
192	233	55	2.25	4.93	5.1			
245	299	43	2.55	3.85	4.9			
66	80	158	0.85	21.89	**	**FH022-11P-90S/L-04E** **FO022-11P-90S/L-04E**	21	156
74	89	142	0.95	19.70	**			
88	107	119	1.10	16.48	4.8			
98	119	107	1.25	14.84	4.9			
119	144	88	1.00	12.19	**			
120	146	87	1.50	12.09	5.0			
134	162	79	1.70	10.89	4.9			
153	185	69	1.25	9.52	4.6			
205	248	51	1.65	7.11	4.1			
272	329	39	2.20	5.35	3.7			
370	448	28	2.55	3.93	3.3			

Legend see page 107

*** ... on request*

P_N = 1.5 kW								IE3
50 Hz 1.5 kW n_{50} min^{-1}	60 Hz 1.8 kW n_{60} min^{-1}	M_2 Nm	f_B	i	at 50 Hz F_{rN} kN	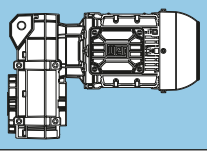	m kg	Dimension sheet see page
5.0	6.1	2850	1.60	288.50	35.6	**FH093-11P-90S/L-04F** **FO093-11P-90S/L-04F**	176	170
5.9	7.2	2410	1.90	243.90	36.9			
6.9	8.3	2086	2.20	211.14	37.7			
7.8	9.4	1847	2.45	186.99	38.2			
9.0	11	1598	2.85	161.76	38.6			
4.0	4.9	3542	0.85	358.52	**	**FH083-11P-90S/L-04F** **FO083-11P-90S/L-04F**	121	168
5.1	6.2	2803	1.10	283.76	20.9			
5.9	7.1	2448	1.25	247.77	23.2			
6.6	8.0	2163	1.40	218.97	24.7			
7.8	9.5	1829	1.65	185.17	26.2			
8.0	9.7	1781	1.70	180.28	26.3			
9.1	11	1572	1.95	159.17	27.0			
10	13	1373	2.20	138.95	27.6			
12	15	1176	2.60	119.05	28.1			
13	16	1088	2.80	110.11	28.3			
14	17	1001	3.00	101.32	28.5			
7.5	9.0	1922	0.80	194.58	**	**FH073-11P-90S/L-04F** **FO073-11P-90S/L-04F**	74	166
9.6	12	1489	1.05	150.69	15.6			
13	15	1132	1.35	114.62	17.8			
15	19	934	1.65	94.52	18.7			
19	23	766	2.00	77.53	19.3			
22	27	651	2.35	65.88	19.6			
27	32	535	2.85	54.16	19.9			
15	18	972	0.85	98.34	**	**FH063-11P-90S/L-04F** **FO063-11P-90S/L-04F**	51	164
16	19	891	0.95	90.17	**			
18	22	795	1.05	80.48	8.8			
20	24	729	1.15	73.80	9.5			
22	27	645	1.30	65.26	10.2			
24	29	591	1.40	59.84	10.6			
27	32	540	1.55	54.63	10.9			
29	35	495	1.70	50.10	11.2			
29	35	491	1.70	49.67	11.2	**FH062-11P-90S/L-04F** **FO062-11P-90S/L-04F**	50	164
32	39	450	1.85	45.55	11.4			
35	42	412	2.00	41.66	11.6			
38	46	377	2.20	38.20	11.8			
44	54	323	2.55	32.69	11.9			
48	59	296	2.80	29.98	12.0			
71	86	202	2.10	20.49	12.3			
19	23	741	0.85	75.04	**	**FH053-11P-90S/L-04F** **FO053-11P-90S/L-04F**	34	162
24	29	595	1.05	60.26	6.2			
26	32	544	1.10	55.06	6.9			
26	31	557	1.10	56.42	6.7	**FH052-11P-90S/L-04F** **FO052-11P-90S/L-04F**	34	162
28	34	509	1.20	51.55	7.3			
33	40	432	1.40	43.75	8.1			
36	44	395	1.55	39.97	8.4			
40	49	354	1.70	35.81	8.7			
44	54	323	1.85	32.72	8.8			
47	56	307	1.20	31.09	8.9			
53	64	272	2.25	27.56	9.1			
58	70	249	2.40	25.18	9.2			
60	73	238	1.55	24.11	9.3			
70	84	206	2.95	20.83	9.4			
73	89	195	1.85	19.73	9.4			
95	116	150	2.40	15.19	9.6			
28	34	516	0.80	52.27	**	**FH043-11P-90S/L-04F** **FO043-11P-90S/L-04F**	29	160
30	37	471	0.85	47.68	**			

Legend see page 107

*** ... on request*

F

P_N = 1.5 kW								IE3
50 Hz 1.5 kW n_{50} min^{-1}	60 Hz 1.8 kW n_{60} min^{-1}	M_2 Nm	f_B	i	at 50 Hz F_{rN} kN	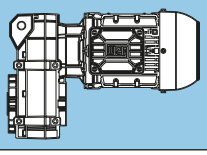	m kg	Dimension sheet see page
30	36	483	0.85	48.94	**	**FH042-11P-90S/L-04F** **FO042-11P-90S/L-04F**	29	160
32	39	441	0.95	44.64	**			
38	46	375	1.10	37.95	4.3			
42	51	342	1.20	34.62	4.9			
47	57	307	1.35	31.06	5.4			
51	62	280	1.45	28.33	5.7			
55	66	263	1.20	26.60	5.9			
61	73	236	1.70	23.91	6.1			
66	80	215	1.90	21.81	6.3			
70	85	204	1.55	20.63	6.4			
80	97	178	2.25	18.06	6.5			
86	104	167	1.85	16.88	6.6			
88	106	163	2.50	16.48	6.6			
98	119	146	2.75	14.78	6.7			
112	135	128	2.45	12.99	6.8			
52	63	276	0.80	27.97	**	**FH032-11P-90S/L-04F** **FO032-11P-90S/L-04F**	27	158
57	69	251	0.90	25.36	**			
69	83	209	1.10	21.14	3.6			
76	92	189	1.20	19.17	3.9			
81	98	177	0.85	17.88	**			
90	109	159	1.40	16.06	4.3			
100	120	144	1.50	14.57	4.5			
105	127	136	1.10	13.81	4.5			
116	140	123	1.65	12.50	4.7			
128	155	112	1.80	11.33	4.7			
131	159	109	1.40	11.03	4.8			
149	180	96	1.95	9.76	4.9			
164	198	87	2.10	8.85	4.9			
174	211	82	1.85	8.33	4.9			
229	277	63	2.30	6.33	5.0			
294	356	49	2.55	4.93	4.7			
377	456	38	2.85	3.85	4.3			
88	106	163	0.80	16.48	**	**FH022-11P-90S/L-04F** **FO022-11P-90S/L-04F**	25	156
98	118	147	0.90	14.84	**			
120	145	119	1.10	12.09	4.8			
133	161	108	1.25	10.89	4.9			
152	184	94	0.90	9.52	**			
204	247	70	1.20	7.11	4.3			
271	328	53	1.60	5.35	3.8			
369	447	39	1.90	3.93	3.4			

Legend see page 107

*** ... on request*

P_N = 2.2 kW								IE3
50 Hz 2.2 kW n_{50} min^{-1}	60 Hz 2.6 kW n_{60} min^{-1}	M_2 Nm	f_B	i	at 50 Hz F_{rN} kN	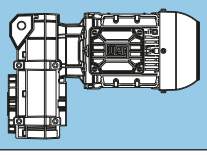	m kg	Dimension sheet see page
5.0	6.0	4224	1.10	288.50	29.6	**FH093-11P-100L-04E** **FO093-11P-100L-04E**	186	170
5.9	7.2	3571	1.30	243.90	32.9			
6.8	8.3	3091	1.50	211.14	34.8			
7.7	9.3	2738	1.65	186.99	36.0			
8.9	11	2368	1.95	161.76	37.0			
9.2	11	2284	2.00	155.99	37.2			
10	13	2015	2.25	137.63	37.8			
12	15	1715	2.65	117.13	38.4			
14	17	1531	2.95	104.54	38.7			
5.8	7.0	3628	0.85	247.77	**	**FH083-11P-100L-04E** **FO083-11P-100L-04E**	132	168
6.6	8.0	3206	0.95	218.97	**			
7.7	9.4	2711	1.15	185.17	21.6			
8.0	9.7	2640	1.15	180.28	22.1			
9.0	11	2330	1.30	159.17	23.9			
10	13	2034	1.50	138.95	25.3			
12	15	1743	1.75	119.05	26.5			
13	16	1612	1.90	110.11	26.9			
14	17	1483	2.05	101.32	27.3			
15	19	1363	2.25	93.11	27.7			
17	21	1244	2.45	84.99	28.0			
18	22	1172	2.60	80.04	28.1			
20	24	1049	2.90	71.62	28.4			
21	25	1023	2.95	69.87	28.5			
13	15	1678	0.90	114.62	**	**FH073-11P-100L-04E** **FO073-11P-100L-04E**	84	166
15	18	1384	1.10	94.52	16.4			
19	23	1135	1.35	77.53	17.8			
22	26	965	1.60	65.88	18.6			
26	32	793	1.90	54.16	19.2			
27	33	765	2.00	52.23	19.3			
32	39	659	2.30	45.02	19.6	**FH072-11P-100L-04E** **FO072-11P-100L-04E**	83	166
37	44	576	2.65	39.31	19.8			
41	50	509	2.95	34.74	20.0			
22	27	955	0.90	65.26	**	**FH063-11P-100L-04E** **FO063-11P-100L-04E**	61	164
24	29	876	0.95	59.84	**			
26	32	800	1.05	54.63	8.8			
29	35	734	1.15	50.10	9.5			
34	42	610	1.35	41.66	10.5	**FH062-11P-100L-04E** **FO062-11P-100L-04E**	60	164
38	46	559	1.50	38.20	10.8			
44	53	479	1.75	32.69	11.3			
48	58	439	1.90	29.98	11.5			
57	69	369	2.25	25.23	11.8			
62	75	339	2.45	23.14	11.9			
69	84	306	2.70	20.87	12.0			
75	91	280	2.95	19.14	12.1			
84	102	252	2.30	17.18	12.2			
106	129	198	2.90	13.49	12.3			

Legend see page 107

*** ... on request*

P_N = 2.2 kW								IE3
50 Hz 2.2 kW n_{50} min^{-1}	60 Hz 2.6 kW n_{60} min^{-1}	M_2 Nm	f_B	i	at 50 Hz F_{rN} kN	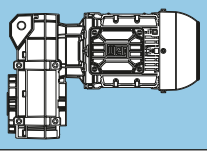	m kg	Dimension sheet see page
40	49	524	1.15	35.81	7.1	**FH052-11P-100L-04E** **FO052-11P-100L-04E**	45	162
44	53	479	1.25	32.72	7.6			
52	63	404	1.50	27.56	8.3			
57	69	369	1.65	25.18	8.6			
69	84	305	2.00	20.83	8.9			
73	88	289	1.25	19.73	9.0			
75	92	279	2.15	19.03	9.1			
84	102	249	2.45	17.04	9.2			
92	112	228	2.65	15.57	9.3			
94	115	222	1.65	15.19	9.3			
104	126	202	3.00	13.82	9.4			
125	152	168	2.15	11.48	9.5			
153	186	137	2.65	9.39	9.6			
46	56	455	0.90	31.06	**	**FH042-11P-100L-04E** **FO042-11P-100L-04E**	39	160
51	62	415	1.00	28.33	**			
60	73	350	1.15	23.91	4.8			
66	80	319	1.30	21.81	5.2			
79	97	264	1.55	18.06	5.8			
85	103	247	1.25	16.88	6.0			
87	106	241	1.70	16.48	6.1			
97	118	216	1.85	14.78	6.3			
106	129	197	2.05	13.48	6.4			
110	134	190	1.65	12.99	6.4			
120	146	176	2.30	11.99	6.5			
131	160	160	2.50	10.93	6.6			
143	174	147	2.60	10.03	6.7			
146	178	144	2.15	9.82	6.7			
157	191	134	2.70	9.15	6.7			
177	215	119	2.90	8.13	6.8			
179	217	118	2.65	8.03	6.8			
183	223	115	2.95	7.84	6.8			
193	235	109	3.00	7.42	6.8			
220	268	95	2.85	6.52	6.9			
75	91	281	0.80	19.17	**	**FH032-11P-100L-04E** **FO032-11P-100L-04E**	38	158
89	109	235	0.95	16.06	**			
98	120	213	1.05	14.57	3.5			
115	140	183	1.15	12.50	4.0			
127	154	166	1.20	11.33	4.2			
130	158	161	0.95	11.03	**			
147	179	143	1.35	9.76	4.5			
162	197	130	1.40	8.85	4.6			
172	209	122	1.25	8.33	4.7			
227	276	93	1.55	6.33	4.9			
291	354	72	1.75	4.93	4.8			
373	453	56	1.90	3.85	4.4			

Legend see page 107

*** ... on request*

P_N = 3.0 kW								IE3
50 Hz 3.0 kW n_{50} min^{-1}	60 Hz 3.6 kW n_{60} min^{-1}	M_2 Nm	f_B	i	at 50 Hz F_{rN} kN	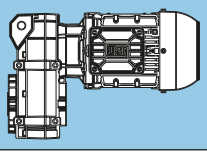	m kg	Dimension sheet see page
5.0	6.0	5740	0.80	288.50	**	**FH093-11P-L100L-04F** **FO093-11P-L100L-04F**	195	170
5.9	7.1	4853	0.95	243.90	**			
6.8	8.2	4201	1.10	211.14	29.8			
7.7	9.3	3720	1.25	186.99	32.2			
8.9	11	3218	1.40	161.76	34.3			
9.2	11	3104	1.45	155.99	34.7			
10	13	2738	1.65	137.63	36.0			
12	15	2330	1.95	117.13	37.1			
14	17	2010	2.25	101.04	37.8			
16	19	1842	2.45	92.59	38.2			
18	22	1593	2.85	80.09	38.6			
19	23	1537	2.95	77.23	38.7			
7.8	9.4	3684	0.85	185.17	**	**FH083-11P-L100L-04F** **FO083-11P-L100L-04F**	140	168
8.0	9.7	3587	0.85	180.28	**			
9.0	11	3167	0.95	159.17	**			
10	12	2839	1.10	142.69	20.7			
12	15	2369	1.30	119.05	23.7			
13	16	2191	1.40	110.11	24.6			
14	17	2016	1.50	101.32	25.4			
15	19	1853	1.65	93.11	26.1			
17	20	1691	1.80	84.99	26.7			
18	22	1592	1.90	80.04	27.0			
20	24	1425	2.15	71.62	27.5			
21	25	1390	2.20	69.87	27.6			
24	29	1191	2.55	59.86	28.1			
25	30	1149	2.65	57.73	28.2			
28	34	1014	3.00	50.95	28.5			
15	18	1881	0.80	94.52	**	**FH073-11P-L100L-04F** **FO073-11P-L100L-04F**	93	166
19	22	1543	1.00	77.53	**			
22	26	1311	1.15	65.88	16.8			
27	32	1078	1.40	54.16	18.1			
28	33	1039	1.45	52.23	18.3			
32	39	896	1.70	45.02	18.9	**FH072-11P-L100L-04F** **FO072-11P-L100L-04F**	92	166
37	44	782	1.95	39.31	19.3			
41	50	691	2.20	34.74	19.5			
49	59	585	2.60	29.38	19.8			
57	69	502	3.00	25.25	20.0			
69	84	412	2.30	20.72	20.1			
26	32	1087	0.80	54.63	**	**FH063-11P-L100L-04F** **FO063-11P-L100L-04F**	70	164
29	35	997	0.85	50.10	**			
35	42	829	1.00	41.66	**	**FH062-11P-L100L-04F** **FO062-11P-L100L-04F**	69	164
38	46	760	1.10	38.20	9.2			
44	53	650	1.30	32.69	10.2			
48	58	596	1.40	29.98	10.6			
57	69	502	1.65	25.23	11.2			
62	75	460	1.80	23.14	11.4			
69	83	415	2.00	20.87	11.6			
75	91	381	2.20	19.14	11.7			
81	98	353	2.35	17.75	11.8			
84	101	342	1.70	17.18	11.9			
88	107	324	2.55	16.28	11.9			
94	113	306	2.70	15.38	12.0			
102	123	281	2.95	14.11	12.1			
107	129	268	2.15	13.49	12.1			
138	167	207	2.80	10.41	12.3			

Legend see page 107

*** ... on request*

P_N = 3.0 kW								IE3
50 Hz 3.0 kW n_{50} min^{-1}	60 Hz 3.6 kW n_{60} min^{-1}	M_2 Nm	f_B	i	at 50 Hz F_{rN} kN	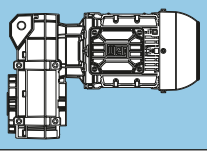	m kg	Dimension sheet see page
40	49	712	0.85	35.81	**	**FH052-11P-L100L-04F** **FO052-11P-L100L-04F**	53	162
44	53	651	0.95	32.72	**			
52	63	548	1.10	27.56	6.8			
57	69	501	1.20	25.18	7.4			
69	84	414	1.45	20.83	8.2			
73	88	393	0.95	19.73	**			
76	91	379	1.60	19.03	8.5			
85	102	339	1.80	17.04	8.7			
92	112	310	1.95	15.57	8.9			
95	115	302	1.20	15.19	9.0			
104	126	275	2.20	13.82	9.1			
114	138	251	2.40	12.63	9.2			
124	150	230	2.65	11.57	9.3			
125	152	228	1.60	11.48	9.3			
136	165	210	2.80	10.57	9.4			
153	185	187	1.95	9.39	9.5			
189	228	152	2.40	7.62	9.6			
226	273	127	2.85	6.38	9.4			
60	73	476	0.85	23.91	**	**FH042-11P-L100L-04F** **FO042-11P-L100L-04F**	47	160
66	80	434	0.95	21.81	**			
80	96	359	1.15	18.06	4.6			
85	103	336	0.95	16.88	**			
87	106	328	1.25	16.48	5.1			
97	118	294	1.40	14.78	5.5			
107	129	268	1.50	13.48	5.8			
111	134	258	1.20	12.99	5.9			
120	145	239	1.70	11.99	6.1			
132	159	217	1.85	10.93	6.3			
144	173	200	1.90	10.03	6.4			
147	177	195	1.60	9.82	6.4			
157	190	182	2.00	9.15	6.5			
177	214	162	2.15	8.13	6.6			
179	217	160	1.95	8.03	6.6			
184	222	156	2.15	7.84	6.6			
194	235	148	2.25	7.42	6.7			
201	243	142	2.25	7.15	6.7			
221	267	130	2.10	6.52	6.8			
264	319	108	2.25	5.45	6.8			
326	394	88	2.45	4.42	6.6			
338	408	85	2.45	4.26	6.6			
115	139	249	0.85	12.50	**	**FH032-11P-L100L-04F** **FO032-11P-L100L-04F**	46	158
127	154	225	0.90	11.33	**			
148	178	194	1.00	9.76	**			
163	197	176	1.05	8.85	4.1			
173	209	166	0.95	8.33	**			
227	275	126	1.15	6.33	4.6			
292	353	98	1.30	4.93	4.8			
374	452	77	1.40	3.85	4.5			

Legend see page 107

*** ... on request*

P_N = 4.0 kW								IE3
50 Hz 4.0 kW n_{50} min^{-1}	60 Hz 4.8 kW n_{60} min^{-1}	M_2 Nm	f_B	i	at 50 Hz F_{rN} kN	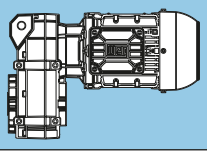	m kg	Dimension sheet see page
6.9	8.3	5562	0.85	211.14	**	FH093-11P-112M-04E FO093-11P-112M-04E	195	170
7.8	9.4	4926	0.95	186.99	**			
9.0	11	4262	1.10	161.76	29.4			
9.3	11	4110	1.10	155.99	30.3			
10	12	3763	1.20	142.85	32.0			
11	13	3626	1.25	137.63	32.7			
12	15	3086	1.50	117.13	34.8			
14	17	2662	1.70	101.04	36.2			
16	19	2439	1.85	92.59	36.8			
18	22	2110	2.15	80.09	37.6			
19	23	2035	2.25	77.23	37.8			
21	26	1795	2.55	68.15	38.3			
25	30	1528	2.95	57.99	38.7			
10	13	3661	0.85	138.95	**	FH083-11P-112M-04E FO083-11P-112M-04E	141	168
12	15	3136	1.00	119.05	**			
13	16	2901	1.05	110.11	20.2			
14	17	2669	1.15	101.32	21.9			
16	19	2453	1.25	93.11	23.2			
17	21	2239	1.35	84.99	24.4			
18	22	2109	1.45	80.04	25.0			
20	25	1887	1.60	71.62	25.9			
21	25	1841	1.65	69.87	26.1			
24	29	1577	1.95	59.86	27.0			
25	30	1521	2.00	57.73	27.2			
28	34	1342	2.25	50.95	27.7			
34	41	1126	2.70	42.74	28.2			
22	27	1736	0.90	65.88	**	FG073-11P-112M-04E FF073-11P-112M-04E	93	166
27	32	1427	1.10	54.16	16.1			
28	34	1376	1.10	52.23	16.4			
32	39	1186	1.30	45.02	17.6	FH072-11P-112M-04E FO072-11P-112M-04E	92	166
37	45	1036	1.45	39.31	18.3			
42	51	915	1.65	34.74	18.8			
49	60	774	1.95	29.38	19.3			
57	70	665	2.30	25.25	19.6			
66	80	581	2.60	22.05	19.8			
70	85	546	1.75	20.72	19.9			
80	97	477	2.35	18.09	20.0			
91	110	421	2.60	15.99	20.1			

Legend see page 107

*** ... on request*

P_N = 4.0 kW								IE3
50 Hz 4.0 kW n_{50} min^{-1}	60 Hz 4.8 kW n_{60} min^{-1}	M_2 Nm	f_B	i	at 50 Hz F_{rN} kN	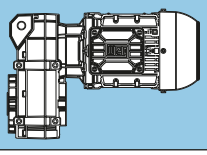	m kg	Dimension sheet see page
38	46	1006	0.85	38.20	**	**FH062-11P-112M-04E** **FO062-11P-112M-04E**	69	164
44	54	861	1.00	32.69	**			
48	59	790	1.05	29.98	8.9			
57	70	665	1.25	25.23	10.1			
63	76	610	1.35	23.14	10.5			
69	84	550	1.50	20.87	10.9			
76	92	504	1.65	19.14	11.2			
82	99	468	1.80	17.75	11.3			
84	102	453	1.30	17.18	11.4			
89	108	429	1.95	16.28	11.5			
94	114	405	2.05	15.38	11.6			
103	124	372	2.25	14.11	11.8			
107	130	355	1.65	13.49	11.8			
112	135	342	2.40	12.99	11.9			
116	140	330	2.50	12.53	11.9			
122	147	314	2.65	11.91	12.0			
126	153	303	2.75	11.49	12.0			
136	164	282	2.95	10.70	12.1			
139	169	274	2.10	10.41	12.1			
168	204	227	2.55	8.61	12.2			
198	240	193	3.00	7.32	12.3			
53	64	726	0.85	27.56	**	**FH052-11P-112M-04E** **FO052-11P-112M-04E**	54	162
58	70	663	0.90	25.18	**			
70	84	549	1.10	20.83	6.8			
76	92	501	1.20	19.03	7.4			
85	103	449	1.35	17.04	7.9			
93	113	410	1.50	15.57	8.2			
95	116	400	0.90	15.19	**			
105	127	364	1.65	13.82	8.6			
115	139	333	1.80	12.63	8.8			
125	152	305	2.00	11.57	8.9			
126	153	302	1.20	11.48	9.0			
137	166	278	2.10	10.57	9.1			
154	187	247	1.50	9.39	9.2			
155	187	247	2.30	9.38	9.2			
160	194	238	2.35	9.04	9.3			
169	205	226	2.45	8.57	9.3			
176	212	218	2.50	8.26	9.3			
190	230	201	1.80	7.62	9.4			
227	275	168	2.15	6.38	9.5			
280	339	136	2.65	5.17	8.8			
291	352	131	2.75	4.98	8.7			

Legend see page 107

*** ... on request*

P_N = 5.5 kW								IE3
50 Hz 5.5 kW n_{50} min^{-1}	60 Hz 6.6 kW n_{60} min^{-1}	M_2 Nm	f_B	i	at 50 Hz F_{rN} kN	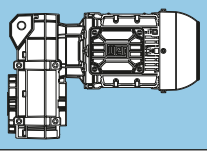	m kg	Dimension sheet see page
9.1	11	5800	0.80	161.76	**	**FH093-11P-132S-04E** **FO093-11P-132S-04E**	215	170
9.4	11	5593	0.85	155.99	**			
10	12	5122	0.90	142.85	**			
11	13	4934	0.95	137.63	**			
12	15	4330	1.05	120.77	29.0			
13	15	4199	1.10	117.13	29.8			
14	17	3748	1.25	104.54	32.1			
16	19	3320	1.40	92.59	33.9			
18	22	2871	1.60	80.09	35.5			
19	23	2769	1.65	77.23	35.9			
21	26	2443	1.85	68.15	36.8			
25	30	2079	2.20	57.99	37.7			
29	35	1794	2.55	50.03	38.3			
13	16	3948	0.80	110.11	**	**FH083-11P-132S-04E** **FO083-11P-132S-04E**	161	168
14	17	3633	0.85	101.32	**			
16	19	3338	0.90	93.11	**			
17	21	3047	1.00	84.99	**			
18	22	2870	1.05	80.04	20.4			
20	25	2568	1.20	71.62	22.5			
21	25	2505	1.20	69.87	22.9			
24	29	2146	1.40	59.86	24.8			
25	31	2070	1.45	57.73	25.2			
29	35	1827	1.65	50.95	26.2			
34	41	1532	2.00	42.74	27.2			
41	49	1291	2.35	36.02	27.9			
43	52	1214	2.30	33.87	28.0	**FH082-11P-132S-04E** **FO082-11P-132S-04E**	152	168
49	59	1076	2.80	30.00	28.3			
27	33	1942	0.80	54.16	**	**FH073-11P-132S-04E** **FO073-11P-132S-04E**	113	166
28	34	1873	0.85	52.23	**			
33	39	1614	0.95	45.02	**	**FH072-11P-132S-04E** **FO072-11P-132S-04E**	112	166
37	45	1409	1.10	39.31	16.2			
42	51	1246	1.25	34.74	17.2			
50	60	1053	1.45	29.38	18.2			
58	70	905	1.70	25.25	18.8			
66	80	791	1.90	22.05	19.2			
71	85	743	1.30	20.72	19.4			
78	93	677	2.25	18.89	19.6			
80	97	653	2.30	18.21	19.6			
81	98	649	1.75	18.09	19.6			
91	110	577	2.65	16.08	19.8			
92	110	573	1.95	15.99	19.8			
108	131	485	2.30	13.52	20.0			
126	152	417	2.65	11.62	20.1			

Legend see page 107

*** ... on request*

P_N = 5.5 kW								IE3
50 Hz 5.5 kW n_{50} min^{-1}	60 Hz 6.6 kW n_{60} min^{-1}	M_2 Nm	f_B	i	at 50 Hz F_{rN} kN	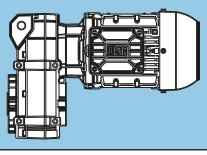	m kg	Dimension sheet see page
49	59	1075	0.80	29.98	**	FH062-11P-132S-04E FO062-11P-132S-04E	89	164
58	70	905	0.95	25.23	**			
63	76	830	1.00	23.14	**			
70	85	748	1.10	20.87	9.3			
77	92	686	1.20	19.14	9.9			
83	99	636	1.30	17.75	10.3			
85	103	616	0.95	17.18	**			
90	108	584	1.45	16.28	10.7			
95	115	551	1.50	15.38	10.9			
104	125	506	1.65	14.11	11.1			
109	131	484	1.20	13.49	11.3			
113	136	466	1.80	12.99	11.4			
117	141	449	1.85	12.53	11.4			
123	148	427	1.95	11.91	11.5			
128	154	412	2.00	11.49	11.6			
137	165	384	2.15	10.70	11.7			
141	170	373	1.55	10.41	11.8			
149	180	352	2.35	9.81	11.8			
170	205	309	1.85	8.61	12.0			
200	241	262	2.20	7.32	12.1			
231	278	228	2.55	6.35	12.2			
273	329	192	3.00	5.36	12.3			
70	85	747	0.85	20.83	**	FH052-11P-132S-04E FO052-11P-132S-04E	74	162
77	93	682	0.90	19.03	**			
86	104	611	1.00	17.04	**			
94	113	558	1.10	15.57	6.7			
106	128	495	1.25	13.82	7.5			
116	140	453	1.35	12.63	7.9			
127	153	415	1.45	11.57	8.2			
128	154	412	0.90	11.48	**			
139	167	379	1.55	10.57	8.5			
156	188	336	1.70	9.38	8.8			
162	195	324	1.75	9.04	8.8			
171	206	307	1.80	8.57	8.9			
177	214	296	1.85	8.26	9.0			
192	232	273	1.35	7.62	9.1			
230	277	229	1.60	6.38	9.3			
283	341	185	1.95	5.17	9.1			
294	354	179	2.05	4.98	8.9			

Legend see page 107

*** ... on request*

P_N = 7.5 kW								IE3
50 Hz 7.5 kW n_{50} min^{-1}	60 Hz 9.0 kW n_{60} min^{-1}	M_2 Nm	f_B	i	at 50 Hz F_{rN} kN	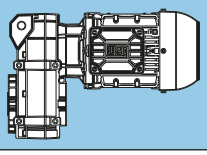	m kg	Dimension sheet see page
12	15	5905	0.80	120.77	**	**FH093-11P-L132M-04F** **FO093-11P-L132M-04F**	224	170
13	15	5727	0.80	117.13	**			
14	18	4940	0.95	101.04	**			
16	19	4527	1.00	92.59	**			
18	22	3916	1.15	80.09	31.3			
19	23	3776	1.20	77.23	32.0			
21	26	3332	1.40	68.15	33.9			
25	31	2835	1.60	57.99	35.7			
29	35	2446	1.85	50.03	36.8			
38	46	1890	2.30	38.65	38.1	**FH092-11P-L132M-04F** **FO092-11P-L132M-04F**	210	170
43	52	1669	2.70	34.13	38.5			
51	62	1397	2.50	28.57	38.9			
77	93	929	2.30	19.01	39.5			
104	126	687	2.50	14.05	37.6			
18	22	3913	0.80	80.04	**	**FH083-11P-L132M-04F** **FO083-11P-L132M-04F**	170	168
20	25	3502	0.90	71.62	**			
21	25	3416	0.90	69.87	**			
24	30	2927	1.05	59.86	20.0			
25	31	2822	1.10	57.73	20.8			
29	35	2491	1.25	50.95	23.0			
34	41	2090	1.45	42.74	25.1			
41	49	1761	1.75	36.02	26.4			
43	52	1656	1.70	33.87	26.8	**FH082-11P-L132M-04F** **FO082-11P-L132M-04F**	161	168
49	59	1467	2.05	30.00	27.4			
56	68	1269	2.40	25.95	27.9			
66	80	1080	2.80	22.08	28.3			
103	125	693	2.55	14.18	29.0			
119	144	600	2.95	12.27	29.1			
37	45	1922	0.80	39.31	**	**FH072-11P-L132M-04F** **FO072-11P-L132M-04F**	121	166
42	51	1698	0.90	34.74	**			
50	60	1436	1.05	29.38	16.0			
58	70	1234	1.25	25.25	17.3			
66	80	1078	1.40	22.05	18.1			
71	85	1013	0.95	20.72	**			
78	94	924	1.65	18.89	18.8			
80	97	890	1.70	18.21	18.9			
81	98	884	1.25	18.09	18.9			
91	110	786	1.95	16.08	19.2			
92	111	782	1.40	15.99	19.3			
108	131	661	1.70	13.52	19.6			
109	131	660	2.30	13.49	19.6			
126	152	568	1.95	11.62	19.8			
129	156	555	2.75	11.36	19.9			
144	175	496	2.25	10.14	20.0			
169	204	425	2.65	8.69	20.1			
175	211	410	2.50	8.38	20.1			

Legend see page 107

*** ... on request*

F

P_N = 7.5 kW								IE3
50 Hz 7.5 kW n_{50} min^{-1}	60 Hz 9.0 kW n_{60} min^{-1}	M_2 Nm	f_B	i	at 50 Hz F_{rN} kN	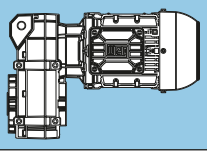	m kg	Dimension sheet see page
70	85	1020	0.85	20.87	**	**FH062-11P-L132M-04F** **FO062-11P-L132M-04F**	98	164
77	92	936	0.90	19.14	**			
83	100	868	0.95	17.75	**			
90	109	796	1.05	16.28	8.8			
95	115	752	1.10	15.38	9.3			
104	125	690	1.20	14.11	9.9			
109	131	660	0.90	13.49	**			
113	136	635	1.30	12.99	10.3			
117	141	613	1.35	12.53	10.5			
123	149	582	1.45	11.91	10.7			
128	154	562	1.50	11.49	10.8			
137	165	523	1.60	10.70	11.0			
141	170	509	1.15	10.41	11.1			
149	180	480	1.75	9.81	11.3			
170	206	421	1.40	8.61	11.6			
200	242	358	1.60	7.32	11.8			
231	279	310	1.85	6.35	12.0			
273	330	262	2.20	5.36	12.1			
283	342	253	2.30	5.17	12.2			
332	401	216	2.65	4.41	12.2			
94	114	761	0.80	15.57	**	**FH052-11P-L132M-04F** **FO052-11P-L132M-04F**	83	162
106	128	676	0.90	13.82	**			
116	140	617	1.00	12.63	**			
127	153	566	1.10	11.57	6.6			
139	167	517	1.15	10.57	7.2			
156	189	459	1.25	9.38	7.8			
162	196	442	1.30	9.04	8.0			
171	207	419	1.35	8.57	8.2			
177	214	404	1.35	8.26	8.3			
192	232	373	1.00	7.62	**			
230	277	312	1.20	6.38	8.9			
283	342	253	1.45	5.17	9.2			
294	355	243	1.50	4.98	9.2			

Legend see page 107

*** ... on request*

P_N = 9.2 kW								IE3
50 Hz 9.2 kW n_{50} min^{-1}	60 Hz 11 kW n_{60} min^{-1}	M_2 Nm	f_B	i	at 50 Hz F_{rN} kN	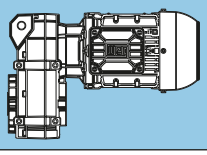	m kg	Dimension sheet see page
16	19	5572	0.85	92.59	**	**FH093-11P-L132M-04G** **FO093-11P-L132M-04G**	233	170
18	22	4820	0.95	80.09	**			
19	23	4648	1.00	77.23	**			
21	26	4101	1.10	68.15	30.3			
25	30	3490	1.30	57.99	33.2			
29	35	3011	1.50	50.03	35.1			
38	46	2326	1.90	38.65	37.1	**FH092-11P-L132M-04G** **FO092-11P-L132M-04G**	219	170
43	52	2054	2.20	34.13	37.7			
49	60	1783	2.55	29.63	38.3			
51	62	1719	2.00	28.57	38.4			
57	69	1541	2.95	25.60	38.7			
77	93	1144	1.90	19.01	39.3			
87	105	1010	2.65	16.79	39.4			
104	126	846	2.00	14.05	38.2			
24	29	3602	0.85	59.86	**	**FH083-11P-L132M-04G** **FO083-11P-L132M-04G**	179	168
25	31	3474	0.90	57.73	**			
29	35	3066	1.00	50.95	**			
34	41	2572	1.20	42.74	22.5			
41	49	2168	1.40	36.02	24.7			
43	52	2038	1.40	33.87	25.3	**FH082-11P-L132M-04G** **FO082-11P-L132M-04G**	170	168
49	59	1805	1.70	30.00	26.2			
56	68	1562	1.95	25.95	27.1			
66	80	1329	2.30	22.08	27.8			
78	94	1131	2.70	18.79	28.2			
103	124	853	2.10	14.18	28.8			
119	144	738	2.40	12.27	28.9			
140	169	628	2.85	10.44	29.1			
50	60	1768	0.85	29.38	**	**FH072-11P-L132M-04G** **FO072-11P-L132M-04G**	130	166
58	70	1519	1.00	25.25	**			
66	80	1327	1.15	22.05	16.8			
70	85	1247	0.80	20.72	**			
77	93	1137	1.35	18.89	17.8			
80	97	1096	1.40	18.21	18.0			
81	98	1089	1.05	18.09	18.1			
91	110	968	1.60	16.08	18.6			
108	131	812	1.85	13.49	19.2			
126	152	699	1.60	11.62	19.5			
129	155	684	2.20	11.36	19.6			
144	174	610	1.85	10.14	19.7			
168	203	523	2.15	8.69	19.9			
174	211	504	2.00	8.38	20.0			
197	239	445	2.55	7.40	20.1			
235	284	374	3.00	6.21	20.2			
82	99	1068	0.80	17.75	**	**FH062-11P-L132M-04G** **FO062-11P-L132M-04G**	107	164
90	108	980	0.85	16.28	**			
95	115	926	0.90	15.38	**			
103	125	849	1.00	14.11	**			
112	136	782	1.05	12.99	9.0			
117	141	754	1.10	12.53	9.3			
123	148	717	1.15	11.91	9.6			
127	154	691	1.20	11.49	9.8			
136	165	644	1.30	10.70	10.2			
140	170	626	0.95	10.41	**			
149	180	590	1.40	9.81	10.6			
170	205	518	1.15	8.61	11.1			
199	241	441	1.30	7.32	11.5			
230	278	382	1.50	6.35	11.7			
272	329	323	1.80	5.36	12.0			
282	341	311	1.85	5.17	12.0			
331	400	265	2.20	4.41	12.1			

Legend see page 107

*** ... on request*

P_N = 9.2 kW								IE3
50 Hz 9.2 kW n_{50} min^{-1}	60 Hz 11 kW n_{60} min^{-1}	M_2 Nm	f_B	i	at 50 Hz F_{rN} kN	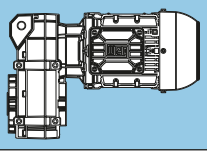	m kg	Dimension sheet see page
116	140	760	0.80	12.63	**	FH052-11P-L132M-04G FO052-11P-L132M-04G	92	162
126	153	696	0.90	11.57	**			
138	167	636	0.95	10.57	**			
156	188	564	1.00	9.38	**			
162	195	544	1.05	9.04	6.9			
170	206	516	1.10	8.57	7.2			
177	214	497	1.10	8.26	7.4			
192	232	459	0.80	7.62	**			
229	277	384	0.95	6.38	**			
282	341	311	1.20	5.17	8.9			
293	354	300	1.25	4.98	9.0			

F

Legend see page 107

*** ... on request*

P_N = 11 kW								IE3
50 Hz 11 kW n_{50} min^{-1}	60 Hz 13 kW n_{60} min^{-1}	M_2 Nm	f_B	i	at 50 Hz F_{rN} kN	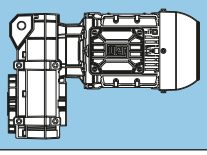	m kg	Dimension sheet see page
18	22	5723	0.80	80.09	**	**FH093-22P-160M-04E** **FO093-22P-160M-04E**	290	170
21	26	4925	0.95	68.92	**			
22	26	4870	0.95	68.15	**			
25	31	4144	1.10	57.99	30.1			
27	33	3851	1.20	53.89	31.6			
29	35	3575	1.30	50.03	32.9			
35	42	2999	1.55	41.97	35.1			
43	52	2438	1.85	34.12	36.8			
55	67	1907	2.40	26.68	38.1			
43	52	2439	1.85	34.13	36.8	**FH092-22P-160M-04E** **FO092-22P-160M-04E**	276	170
50	60	2117	2.15	29.63	37.6			
57	69	1829	2.50	25.60	38.2			
67	81	1566	2.90	21.91	38.7			
88	106	1200	2.25	16.79	39.2			
101	122	1041	2.60	14.57	39.1			
117	141	900	3.00	12.59	37.1			
29	35	3641	0.85	50.95	**	**FH083-22P-160M-04E** **FO083-22P-160M-04E**	236	168
34	42	3054	1.00	42.74	**			
41	49	2574	1.20	36.02	22.5			
50	60	2110	1.45	29.53	25.0			
49	59	2144	1.40	30.00	24.8	**FH082-22P-160M-04E** **FO082-22P-160M-04E**	227	168
57	68	1854	1.65	25.95	26.1			
67	80	1578	1.95	22.08	27.0			
78	94	1343	2.25	18.79	27.7			
91	110	1158	2.60	16.21	28.2			
104	125	1013	1.75	14.18	28.5			
120	145	877	2.05	12.27	28.7			
141	170	746	2.40	10.44	28.9			
166	200	635	2.80	8.88	29.1			
67	80	1576	1.00	22.05	**	**FH072-22P-160M-04E** **FO072-22P-160M-04E**	187	166
78	94	1350	1.15	18.89	16.6			
91	110	1149	1.35	16.08	17.8			
109	132	964	1.60	13.49	18.6			
129	156	812	1.85	11.36	19.2			
145	175	725	1.55	10.14	19.4			
158	190	666	2.30	9.32	19.6			
169	204	621	1.80	8.69	19.7			
199	240	529	2.15	7.40	19.9			
237	286	444	2.55	6.21	20.1			
281	339	374	3.00	5.23	19.2			
104	126	1008	0.85	14.11	**	**FH062-22P-160M-04E** **FO062-22P-160M-04E**	164	164
113	137	928	0.90	12.99	**			
123	149	851	1.00	11.91	**			
137	166	765	1.10	10.70	9.2			
150	181	701	1.20	9.81	9.8			
231	280	454	1.30	6.35	11.4			
274	331	383	1.50	5.36	11.7			
333	402	315	1.85	4.41	12.0			

Legend see page 107

*** ... on request*

P_N = 15 kW								IE3
50 Hz 15 kW n_{50} min^{-1}	60 Hz 18 kW n_{60} min^{-1}	M_2 Nm	f_B	i	at 50 Hz F_{rN} kN	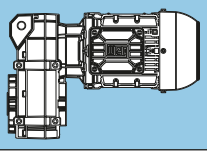	m kg	Dimension sheet see page
25	31	5670	0.80	57.99	**	**FH093-22P-160L-04F** **FO093-22P-160L-04F**	313	170
27	33	5269	0.90	53.89	**			
29	35	4892	0.95	50.03	**			
35	42	4104	1.10	41.97	30.3			
43	52	3336	1.35	34.12	33.9			
55	67	2609	1.75	26.68	36.3			
43	52	3337	1.35	34.13	33.9	**FH092-22P-160L-04F** **FO092-22P-160L-04F**	299	170
49	60	2897	1.60	29.63	35.5			
57	69	2503	1.80	25.60	36.6			
67	81	2142	2.15	21.91	37.5			
77	94	1850	2.45	18.92	38.2			
87	106	1642	1.65	16.79	38.5			
92	111	1565	2.90	16.00	38.7			
101	122	1425	1.90	14.57	38.9			
116	141	1231	2.20	12.59	38.3			
136	165	1054	2.55	10.78	36.1			
157	191	910	2.95	9.31	34.3			
41	49	3522	0.90	36.02	**	**FH083-22P-160L-04F** **FO083-22P-160L-04F**	259	168
50	60	2887	1.05	29.53	20.3			
49	59	2933	1.05	30.00	19.9	**FH82-22P-160L-04F** **FO082-22P-160L-04F**	250	168
56	68	2537	1.20	25.95	22.7			
66	80	2159	1.40	22.08	24.7			
78	94	1837	1.65	18.79	26.1			
90	110	1585	1.90	16.21	27.0			
103	125	1387	1.30	14.18	27.6			
108	131	1330	2.30	13.60	27.8			
119	145	1200	1.50	12.27	28.1			
132	160	1081	2.80	11.06	28.3			
140	170	1021	1.75	10.44	28.5			
165	200	868	2.05	8.88	28.7			
191	232	749	2.40	7.66	28.9			
228	276	629	2.85	6.43	29.1			
78	94	1847	0.85	18.89	**	**FH072-22P-160L-04F** **FO072-22P-160L-04F**	210	166
91	110	1572	1.00	16.08	**			
109	132	1319	1.15	13.49	16.8			
129	156	1111	1.40	11.36	17.9			
144	175	992	1.15	10.14	18.5			
157	190	911	1.65	9.32	18.8			
169	204	850	1.35	8.69	19.0			
198	240	724	1.55	7.40	19.4			
236	286	607	1.85	6.21	19.7			
280	339	511	2.20	5.23	19.8			
341	414	419	2.60	4.29	18.4			
137	166	1046	0.80	10.70	**	**FH062-22P-160L-04F** **FO062-22P-160L-04F**	187	164
149	181	959	0.90	9.81	**			
231	280	621	0.95	6.35	**			
273	331	524	1.10	5.36	11.0			
332	402	431	1.35	4.41	11.5			

Legend see page 107

*** ... on request*

P_N = 18.5 kW								IE3
50 Hz 18.5 kW n_{50} min^{-1}	60 Hz 22 kW n_{60} min^{-1}	M_2 Nm	f_B	i	at 50 Hz F_{rN} kN	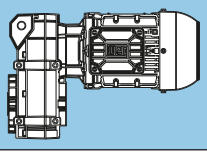	m kg	Dimension sheet see page
50	60	3561	1.30	29.63	32.9	**FH092-22P-180M-04E** **FO092-22P-180M-04E**	313	170
57	69	3077	1.50	25.60	34.8			
67	81	2633	1.75	21.91	36.3			
78	94	2274	2.00	18.92	37.2			
92	111	1923	2.35	16.00	38.0			
101	122	1751	1.55	14.57	38.3			
113	136	1570	2.90	13.06	38.7			
117	141	1513	1.80	12.59	38.8			
136	165	1296	2.10	10.78	37.0			
158	191	1119	2.40	9.31	34.9			
187	226	946	2.85	7.87	32.8			
57	68	3119	1.00	25.95	**	**FH082-22P-180M-04E** **FO082-22P-180M-04E**	264	168
67	80	2654	1.15	22.08	22.0			
78	94	2258	1.35	18.79	24.3			
91	110	1948	1.55	16.21	25.7			
108	131	1635	1.85	13.60	26.8			
120	145	1475	1.20	12.27	27.3			
133	160	1329	2.30	11.06	27.8			
141	170	1255	1.45	10.44	27.9			
166	200	1067	1.70	8.88	28.4			
170	205	1040	2.90	8.65	28.4			
192	232	291	1.95	7.66	28.6			
229	276	773	2.30	6.43	28.9			
281	339	629	2.85	5.23	27.8			

P_N = 22 kW								IE3
50 Hz 22 kW n_{50} min^{-1}	60 Hz 26 kW n_{60} min^{-1}	M_2 Nm	f_B	i	at 50 Hz F_{rN} kN	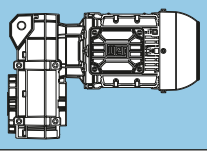	m kg	Dimension sheet see page
50	60	4235	1.10	29.63	29.6	**FH092-22P-180L-04F** **FO092-22P-180L-04F**	334	170
57	69	3659	1.25	25.60	32.5			
67	81	3131	1.45	21.91	34.6			
78	94	2704	1.70	18.92	36.1			
92	111	2287	2.00	16.00	37.2			
101	122	2082	1.30	14.57	37.7			
113	136	1867	2.45	13.06	38.1			
117	141	1799	1.50	12.59	38.3			
136	165	1541	1.75	10.78	37.8			
139	168	1514	3.00	10.59	36.9			
158	191	1331	2.05	9.31	35.6			
187	226	1125	2.40	7.87	33.4			
229	276	918	2.95	6.42	31.0			
57	68	3709	0.85	25.95	**	**FH082-22P-180L-04F** **FO082-22P-180L-04F**	285	168
67	80	3156	1.00	22.08	**			
78	94	2686	1.15	18.79	21.7			
91	110	2317	1.30	16.21	23.9			
108	131	1944	1.55	13.60	25.7			
120	145	1754	1.05	12.27	26.4			
133	160	1581	1.90	11.06	27.0			
141	170	1492	1.20	10.44	27.3			
166	200	1269	1.40	8.88	27.9			
170	205	1236	2.45	8.65	28.0			
192	232	1095	1.65	7.66	28.3			
229	276	919	1.95	6.43	28.6			
281	339	747	2.40	5.23	28.2			

Legend see page 107

*** ... on request*

P_N = 30 kW								IE3
50 Hz 30 kW n_{50} min^{-1}	60 Hz 36 kW n_{60} min^{-1}	M_2 Nm	f_B	i	at 50 Hz F_{rN} kN	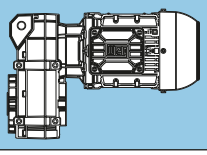	m kg	Dimension sheet see page
58	70	4956	0.95	25.60	**	**FH092-22P-200L-04E** **FO092-22P-200L-04E**	392	170
68	81	4241	1.10	21.91	29.5			
78	94	3663	1.25	18.92	32.5			
93	111	3097	1.50	16.00	34.8			
113	136	2528	1.80	13.06	36.6			
118	141	2437	1.10	12.59	36.8			
137	165	2087	1.30	10.78	37.7			
140	168	2050	2.20	10.59	37.7			
159	191	1802	1.50	9.31	37.2			
175	210	1638	2.75	8.46	35.1			
188	226	1523	1.80	7.87	34.7			
231	277	1243	2.20	6.42	32.0			
284	342	1009	2.70	5.21	29.5			

F

Legend see page 107

*** ... on request*

Selection tables - Gear units

Structure of the selection tables

1	2	3	4	5	6									
Type	$i_{ges.}$	M_{2nenn}	n_2	i_{exakt}	IEC motor frame size									
		[Nm]	[min^{-1}]		63	71	80	90	100	112	132	160	180	200
F022	97.85	130	14	1957/20										
2 stages 7	88.09	130	16	969/11										
	76.22	130	18	3811/50										
	68.62	130	20	3774/55										
n_1=1400 min^{-1} 8	61.80	130	23	309/5										
	55.64	130	25	612/11										
	48.69	130	29	2678/55										
Maximum torque 130 Nm 9	43.83	130	32	5304/121										
	37.52	130	37	5253/140										

1 Type of gear unit

2 Total ratio

3 Permissible output torque at S1 operation (f_B = 1.0)

4 Output speed (gear unit) at n_1 = 1400 min^{-1}

5 Exact mathematical ratio

6 Possible motor frame sizes

7 Number of gear stages

8 Motor speed

9 Maximum torque

F

Type	$i_{ges.}$	M_{2nenn} [Nm]	n_2 [min^{-1}]	i_{exakt}	IEC motor frame size 63	71	80	90	100	112	132	160	180	200
F022	97.85	130	14	1957/20										
2 stages n_1=1400 min^{-1} Maximum torque 130 Nm	88.09	130	16	969/11										
	76.22	130	18	3811/50										
	68.62	130	20	3774/55										
	61.80	130	23	309/5										
	55.64	130	25	612/11										
	48.69	130	29	2678/55										
	43.83	130	32	5304/121										
	37.52	130	37	5253/140										
	33.78	130	41	2601/77										
	31.79	53	44	1653/52										
	29.32	130	48	3811/130										
	26.39	130	53	3774/143										
	24.76	84	57	3219/130										
	21.89	130	64	1751/80										
	20.08	84	70	261/13										
	19.70	130	71	867/44										
	16.48	130	85	412/25										
	15.82	84	89	174/11										
	14.84	130	94	816/55										
	12.19	84	115	4437/364										
	12.09	130	116	2781/230										
	10.89	130	129	2754/253										
	9.52	84	147	3219/338										
	7.11	84	197	1479/208										
	5.35	84	261	348/65										
	3.93	72	356	2349/598										
F032	70.17	220	20	7719/110										
2 stages n_1=1400 min^{-1} Maximum torque 220 Nm	63.63	220	22	1909/30										
	57.07	220	25	2511/44										
	51.75	220	27	207/4										
	45.35	220	31	5487/121										
	41.12	220	34	1357/33										
	35.03	220	40	2697/77										
	31.76	220	44	667/21										
	27.97	220	50	3999/143										
	27.67	119	51	83/3										
	25.36	220	55	989/39										
	22.50	147	62	45/2										
	21.14	220	66	465/22										
	19.17	220	73	115/6										
	17.88	150	78	590/33										
	16.06	220	87	1767/110										
	14.57	214	96	437/30										
	13.81	150	101	290/21										
	12.50	203	112	3162/253										
	11.33	197	124	34/3										
	11.03	150	127	430/39										
	9.76	187	144	1395/143										
	8.85	181	158	115/13										
	8.33	150	168	25/3										
	6.33	141	221	19/3										
	4.93	123	284	340/69										
	3.85	107	364	50/13										

Legend see page 147

Type	$i_{ges.}$	M_{2nenn} [Nm]	n_2 [min^{-1}]	i_{exakt}	IEC motor frame size 63	71	80	90	100	112	132	160	180	200
F042	75.79	322	18	1819/24	■	■	■	■						
2 stages n_1=1400 min^{-1} Maximum torque 400 Nm	69.14	293	20	4494/65	■	■	■	■						
	61.98	400	23	2975/48	■	■	■	■						
	56.54	396	25	735/13	■	■	■	■						
	48.94	400	29	1615/33	■	■	■	■						
	44.64	400	31	6384/143	■	■	■	■						
	41.20	175	34	8239/200	■	■	■	■						
	37.95	400	37	2125/56	■	■	■	■						
	34.62	400	40	450/13	■	■	■	■						
	33.69	236	42	539/16	■	■	■	■						
	31.06	400	45	1615/52	■	■	■	■	■					
	28.33	400	49	4788/169	■	■	■	■	■					
	26.60	308	53	133/5	■	■	■	■						
	23.91	400	59	765/32	■	■	■	■	■					
	21.81	400	64	567/26	■	■	■	■	■					
	20.63	308	68	165/8	■	■	■	■						
	18.06	400	78	289/16	■	■	■	■	■					
	16.88	308	83	4389/260	■	■	■	■	■					
	16.48	400	85	1071/65	■	■	■	■	■					
	14.78	400	95	340/23	■	■	■	■	■					
	13.48	400	104	4032/299	■	■	■	■	■					
	12.99	308	108	2079/160	■	■	■	■	■					
	11.99	400	117	935/78			■	■	■					
	10.93	394	128	1848/169			■	■	■					
	10.03	378	140	1445/144			■	■	■					
	9.82	308	143	3927/400	■	■	■	■	■					
	9.15	361	153	119/13			■	■	■					
	8.13	340	172	2635/324			■	■	■					
	8.03	308	174	924/115	■	■	■	■	■					
	7.84	334	179	2635/336					■					
	7.42	325	189	868/117			■	■	■					
	7.15	319	196	93/13					■					
	6.52	271	215	847/130			■	■	■					
	5.45	242	257	1309/240			■	■	■					
	4.42	212	317	2387/540			■	■	■					
	4.26	207	328	341/80					■					
F043	422.98	400	3,3	17765/42	■	■								
3 stages n_1=1400 min^{-1} Maximum torque 400 Nm	385.85	400	3,6	5016/13	■	■								
	329.48	400	4,2	6919/21	■	■	■	■						
	300.55	400	4,7	19536/65	■	■	■	■						
	267.14	400	5,2	1870/7	■	■	■	■						
	243.69	400	5,7	3168/13	■	■	■	■						
	210.48	400	6,7	4420/21	■	■	■	■						
	192.00	400	7,3	192/1	■	■	■	■						
	162.19	400	8,6	15895/98	■	■	■	■						
	147.96	400	9,5	13464/91	■	■	■	■						
	126.72	400	11	34595/273	■	■	■	■	■					
	115.60	400	12	19536/169	■	■	■	■	■					
	94.61	400	15	15895/168	■	■	■	■	■					
	86.31	400	16	1122/13	■	■	■	■	■					
	71.24	400	20	1496/21	■	■	■	■	■					
	64.98	400	22	4224/65	■	■	■	■	■					
	52.27	400	27	8415/161	■	■	■	■	■					
	47.68	400	29	14256/299	■	■	■	■	■					

Legend see page 147

Type	$i_{ges.}$	M_{2nenn} [Nm]	n_2 [min^{-1}]	i_{exakt}	IEC motor frame size 63	71	80	90	100	112	132	160	180	200
F052	87.38	371	16	5243/60	■	■	■	■						
2 stages n_1=1400 min^{-1} Maximum torque 600 Nm	79.84	339	18	10379/130	■	■	■	■						
	71.46	501	20	1715/24	■	■	■	■						
	65.29	457	21	3395/52	■	■	■	■						
	56.42	600	25	1862/33	■	■	■	■						
	51.55	597	27	7372/143	■	■	■	■						
	48.15	204	29	963/20	■	■	■	■						
	43.75	600	32	175/4	■	■	■	■						
	39.97	597	35	7275/182	■	■	■	■						
	39.38	276	36	315/8	■	■	■	■						
	35.81	600	39	931/26	■	■	■	■	■	■	■			
	32.72	597	43	5529/169	■	■	■	■	■	■	■			
	31.09	360	45	342/11	■	■	■	■						
	27.56	600	51	441/16	■	■	■	■	■	■	■			
	25.18	597	56	2619/104	■	■	■	■	■	■	■			
	24.11	360	58	675/28	■	■	■	■						
	20.83	600	67	833/40	■	■	■	■	■	■	■			
	19.73	360	71	513/26	■	■	■	■	■	■	■			
	19.03	597	74	4947/260	■	■	■	■	■	■	■			
	17.04	600	82	392/23	■	■	■	■	■	■	■			
	15.57	597	90	4656/299	■	■	■	■	■	■	■			
	15.19	360	92	243/16	■	■	■	■	■	■	■			
	13.82	600	101	539/39			■	■	■	■	■			
	12.63	597	111	2134/169			■	■	■	■	■			
	11.57	600	121	833/72			■	■	■	■	■			
	11.48	360	122	459/40	■	■	■	■	■	■	■			
	10.57	584	132	1649/156			■	■	■	■	■			
	9.39	360	149	216/23	■	■	■	■	■	■	■			
	9.38	564	149	1519/162			■	■	■	■	■			
	9.04	558	155	217/24					■	■	■			
	8.57	549	163	3007/351			■	■	■	■	■			
	8.26	543	169	3007/364					■	■	■			
	7.62	360	184	99/13			■	■	■	■	■			
	6.38	360	220	51/8			■	■	■	■	■			
	5.17	360	271	31/6			■	■	■	■	■			
	4.98	360	281	279/56					■	■	■			
F053	487.67	600	2,9	1463/3	■	■								
3 stages n_1=1400 min^{-1} Maximum torque 600 Nm	445.56	597	3,1	40546/91	■	■								
	379.87	600	3,7	5698/15	■	■	■	■						
	347.07	597	4,0	157916/455	■	■	■	■						
	308.00	600	4,5	308/1	■	■	■	■						
	281.41	597	5,0	25608/91	■	■	■	■						
	242.67	600	5,8	728/3	■	■	■	■						
	221.71	597	6,3	1552/7	■	■	■	■						
	187.00	600	7,5	187/1	■	■	■	■						
	170.85	597	8,2	108834/637	■	■	■	■						
	146.10	600	9,6	5698/39	■	■	■	■						
	133.49	597	10	157916/1183	■	■	■	■						
	109.08	600	13	1309/12	■	■	■	■						
	99.66	597	14	18139/182	■	■	■	■						
	82.13	600	17	1232/15	■	■	■	■						
	75.04	597	19	34144/455	■	■	■	■						
	60.26	600	23	1386/23	■	■	■	■						
	55.06	597	25	115236/2093	■	■	■	■						

Legend see page 147

Type	$i_{ges.}$	M_{2nenn} [Nm]	n_2 [min^{-1}]	i_{exakt}	IEC motor frame size 63	71	80	90	100	112	132	160	180	200
F062	49.67	820	28	4520/91	■	■	■	■						
2 stages n_1=1400 min^{-1} Maximum torque 820 Nm	45.55	820	31	8927/196	■	■	■	■						
	41.66	820	34	7040/169	■	■	■	■	■	■	■			
	38.20	820	37	3476/91	■	■	■	■	■	■	■			
	32.69	820	43	425/13	■	■	■	■	■	■	■			
	29.98	820	47	6715/224	■	■	■	■	■	■	■			
	25.23	820	55	328/13	■	■	■	■	■	■	■			
	23.14	820	61	3239/140	■	■	■	■	■	■	■			
	20.87	820	67	480/23	■	■	■	■	■	■	■			
	20.49	422	68	3729/182	■	■	■	■						
	19.14	820	73	3081/161	■	■	■	■	■	■	■			
	17.75	820	79	3000/169			■	■	■	■	■			
	17.18	571	81	2904/169	■	■	■	■	■	■	■			
	16.28	820	86	5925/364			■	■	■	■	■			
	15.38	820	91	200/13			■	■	■	■	■	■		
	14.11	820	99	395/28			■	■	■	■	■	■		
	13.49	571	104	2805/208	■	■	■	■	■	■	■			
	12.99	820	108	1520/117			■	■	■	■	■	■		
	12.53	820	112	1140/91					■	■	■			
	11.91	820	118	1501/126			■	■	■	■	■	■		
	11.49	820	122	4503/392					■	■	■			
	10.70	820	131	3200/299			■	■	■	■	■	■		
	10.41	571	135	1353/130	■	■	■	■	■	■	■			
	9.81	820	143	1580/161			■	■	■	■	■	■		
	8.61	571	163	198/23	■	■	■	■	■	■	■			
	7.32	571	191	2475/338			■	■	■	■	■			
	6.35	571	221	165/26			■	■	■	■	■	■		
	5.36	571	261	209/39			■	■	■	■	■	■		
	5.17	571	271	1881/364					■	■	■			
	4.41	571	317	1320/299			■	■	■	■	■	■		
F063	412.64	820	3,4	80464/195	■	■	■	■						
3 stages n_1=1400 min^{-1} Maximum torque 820 Nm	378.37	820	3,7	397291/1050	■	■	■	■						
	337.44	820	4,1	13160/39	■	■	■	■						
	309.42	820	4,5	3713/12	■	■	■	■						
	266.44	820	5,3	114304/429	■	■	■	■						
	244.32	820	5,7	282188/1155	■	■	■	■						
	206.59	820	6,8	18800/91	■	■	■	■						
	189.44	820	7,4	18565/98	■	■	■	■						
	169.09	820	8,3	28576/169	■	■	■	■						
	155.05	820	9,0	70547/455	■	■	■	■						
	130.15	820	11	1692/13	■	■	■	■						
	119.35	820	12	33417/280	■	■	■	■						
	98.34	820	14	6392/65	■	■	■	■						
	90.17	820	16	63121/700	■	■	■	■						
	80.48	820	17	24064/299	■	■	■	■						
	73.80	820	19	59408/805	■	■	■	■						
	65.26	820	21	33088/507			■	■	■	■				
	59.84	820	23	81686/1365			■	■	■	■				
	54.63	820	26	6392/117			■	■	■	■				
	50.10	820	28	63121/1260			■	■	■	■				

Legend see page 147

Type	$i_{ges.}$	M_{2nenn} [Nm]	n_2 [min^{-1}]	i_{exakt}	IEC motor frame size 63	71	80	90	100	112	132	160	180	200
F072	45.02	1500	31	5763/128										
2 stages n_1=1400 min^{-1} Maximum torque 1500 Nm	39.31	1500	36	629/16										
	34.74	1500	40	5559/160										
	29.38	1500	48	2703/92										
	25.25	1500	55	5253/208										
	22.05	1500	64	1411/64										
	20.72	939	68	1243/60										
	18.89	1500	74	170/9										
	18.21	1500	77	255/14										
	18.09	1103	77	814/45										
	16.08	1500	87	1479/92										
	15.99	1094	88	1199/75										
	13.52	1103	104	4664/345										
	13.49	1500	104	2805/208										
	11.62	1085	120	2266/195										
	11.36	1500	123	2091/184										
	10.14	1115	138	913/90										
	9.32	1500	150	969/104										
	8.69	1115	161	704/81										
	8.38	1006	167	176/21										
	7.40	1115	189	2552/345										
	6.21	1115	226	242/39										
	5.23	1115	268	1804/345										
	4.29	1081	327	836/195										
F073	385.37	1500	3,6	61659/160										
3 stages n_1=1400 min^{-1} Maximum torque 1500 Nm	305.42	1500	4,6	26877/88										
	237.15	1500	5,9	4743/20										
	194.58	1500	7,2	12648/65										
	150.69	1500	9,3	96441/640										
	114.62	1500	12	45849/400										
	94.52	1500	15	17391/184										
	77.53	1500	18	80631/1040										
	65.88	1500	21	527/8										
	54.16	1500	26	19499/360										
	52.23	1500	27	58497/1120										

Legend see page 147

Type	$i_{ges.}$	M_{2nenn} [Nm]	n_2 [min^{-1}]	i_{exakt}	IEC motor frame size 63	71	80	90	100	112	132	160	180	200
F082	33.87	2785	41	6165/182			■	■	■	■	■			
2 stages n_1=1400 min^{-1} Maximum torque 3000 Nm	30.00	3000	47	30/1			■	■	■	■	■	■		
	25.95	3000	54	545/21			■	■	■	■	■	■	■	
	22.08	3000	63	3555/161			■	■	■	■	■	■	■	
	18.79	3000	75	1710/91					■	■	■	■	■	
	16.21	3000	86	2610/161					■	■	■	■	■	
	13.60	3000	103	2475/182								■	■	
	11.06	3000	127	387/35								■	■	
	10.44	1762	134	6241/598			■	■	■	■	■	■	■	
	8.88	1762	158	1501/169					■	■	■	■	■	
	8.65	3000	162	1755/203								■	■	
	7.66	1762	183	2291/299					■	■	■	■	■	
	6.43	1762	218	4345/676								■	■	
	5.23	1762	268	3397/650								■	■	
	4.09	1762	343	237/58								■	■	
F083	358.52	3000	3,9	32625/91	■	■	■	■	■	■	■			
3 stages n_1=1400 min^{-1} Maximum torque 3000 Nm	283.76	3000	4,9	127125/448	■	■	■	■	■	■	■			
	247.77	3000	5,7	13875/56			■	■	■	■	■			
	218.97	3000	6,4	24525/112	■	■	■	■	■	■	■			
	185.17	3000	7,6	59625/322	■	■	■	■	■	■	■			
	180.28	3000	7,8	114840/637	■	■	■	■	■	■	■			
	159.17	3000	8,8	115875/728			■	■	■	■	■			
	142.69	3000	9,8	55935/392	■	■	■	■	■	■	■			
	138.95	3000	10	31125/224			■	■	■	■	■	■		
	124.59	3000	11	6105/49			■	■	■	■	■			
	119.05	3000	12	2500/21			■	■	■	■	■	■		
	114.80	3000	12	5625/49					■	■	■			
	110.11	3000	13	10791/98	■	■	■	■	■	■	■			
	101.32	3000	14	32625/322			■	■	■	■	■	■		
	93.11	3000	15	104940/1127	■	■	■	■	■	■	■			
	84.99	3000	16	61875/728					■	■	■	■		
	80.04	3000	17	50985/637			■	■	■	■	■			
	71.62	3000	20	46125/644					■	■	■	■		
	69.87	3000	20	13695/196			■	■	■	■	■	■		
	59.86	3000	23	8800/147			■	■	■	■	■	■		
	58.72	3000	24	21375/364								■		
	57.73	3000	24	19800/343					■	■	■			
	50.95	3000	27	57420/1127			■	■	■	■	■	■		
	42.74	3000	33	27225/637					■	■	■	■		
	36.02	3000	39	40590/1127					■	■	■	■		
	29.53	3000	47	18810/637								■		

Legend see page 147

Type	$i_{ges.}$	M_{2nenn} [Nm]	n_2 [min^{-1}]	i_{exakt}	IEC motor frame size									
					63	71	80	90	100	112	132	160	180	200
F092	38.65	4326	36	2512/65										
2 stages n_1=1400 min^{-1} Maximum torque 4500 Nm	34.13	4500	41	512/15										
	29.63	4500	47	800/27										
	28.57	3430	49	200/7										
	25.60	4500	55	128/5										
	21.91	4500	64	1424/65										
	19.01	2128	74	13345/702										
	18.92	4500	74	2176/115										
	16.79	2676	83	1360/81										
	16.00	4500	88	16/1										
	14.57	2676	96	10625/729										
	14.05	1687	100	10625/756										
	13.06	4500	107	1632/125										
	12.59	2676	111	340/27										
	10.78	2676	130	7565/702										
	10.59	4500	132	1536/145										
	9.31	2676	150	5780/621										
	8.46	4440	166	296/35										
	7.87	2676	178	425/54										
	6.42	2676	218	289/45										
	5.21	2676	269	1360/261										
	4.16	2490	337	3145/756										
F093	288.50	4500	4,9	165888/575										
3 stages n_1=1400 min^{-1} Maximum torque 4500 Nm	243.90	4500	5,7	129024/529										
	211.14	4500	6,6	315648/1495										
	186.99	4500	7,5	21504/115										
	161.76	4500	8,7	55808/345										
	155.99	4500	9,0	125568/805										
	142.85	4500	9,8	17856/125										
	137.63	4500	10	364032/2645										
	120.77	4500	12	13888/115										
	117.13	4500	12	175104/1495										
	104.54	4500	13	33976/325										
	101.04	4500	14	267264/2645										
	92.59	4500	15	6944/75										
	84.76	4500	17	25344/299										
	80.09	4500	17	54064/675										
	77.23	4500	18	13516/175										
	68.92	4500	20	198144/2875										
	68.15	4500	21	39184/575										
	57.99	4500	24	18848/325										
	53.89	4500	26	179712/3335										
	50.03	4500	28	28768/575										
	41.97	4500	33	2728/65										
	34.12	4500	41	21328/625										
	26.68	4500	52	19344/725										

Legend see page 147

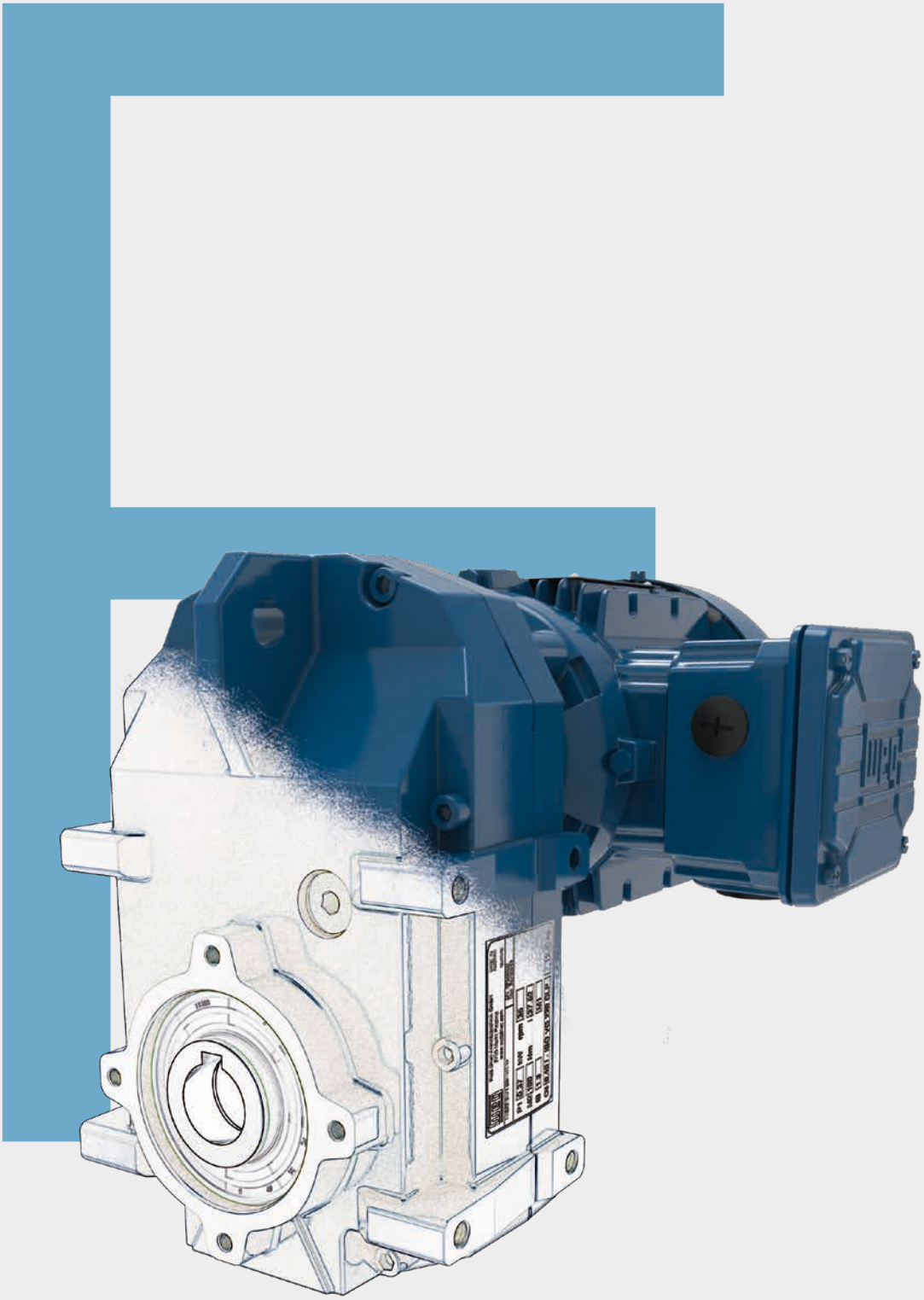

FH02 - Hollow shaft

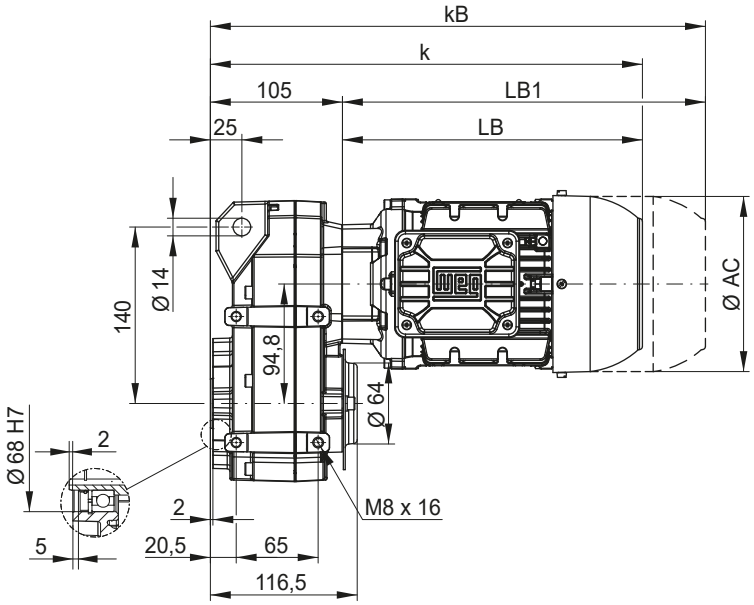

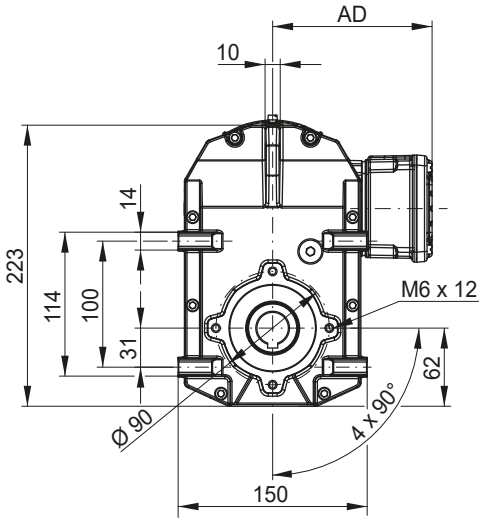

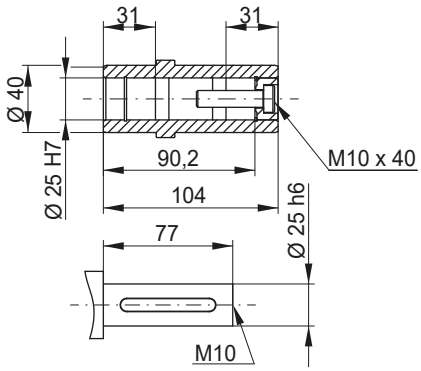

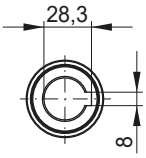

FD02 - Shrink disc *

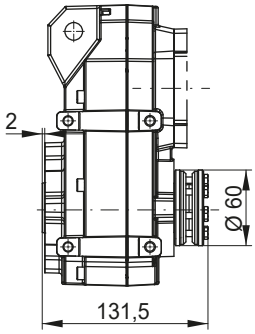

FS02 - Output shaft
FB02 - Output shaft on both sides

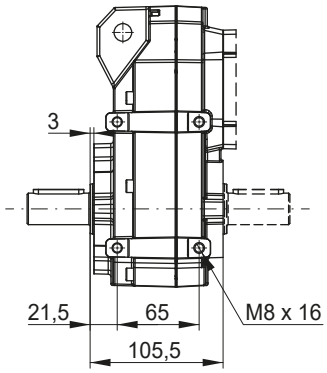

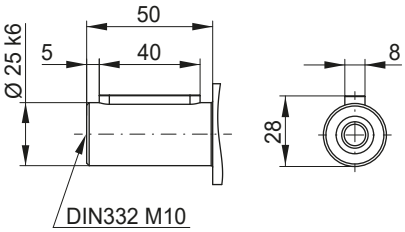

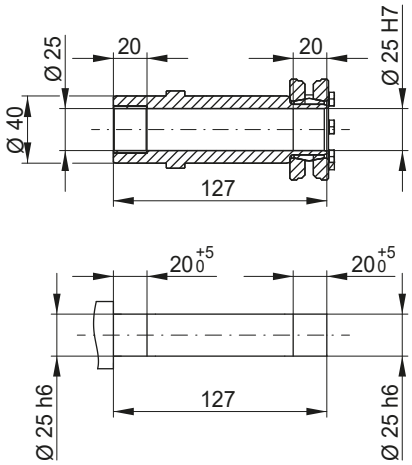

Motor fr. / Dimension	63	71	80	90S/L
AC	126	141	159	178
AD	128	136	145	155
k	309	343	351	393
kB	353	392	409	466
LB	204	238	246	288
LB1	248	287	304	361

Motor dimension sheets see page 266. Description of motor lengths LB and LB1 see page 270.

FO02 - B5 flange execution with hollow shaft

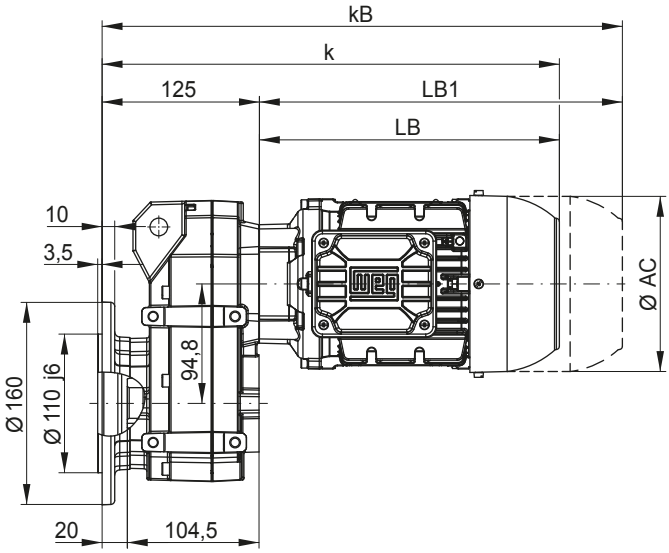

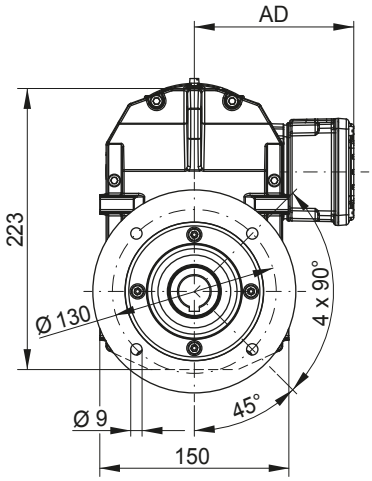

FF02 - B5 flange execution with output shaft

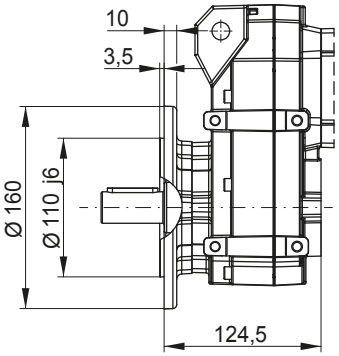

FP02 - B5 flange execution with hollow shaft and shrink disc *

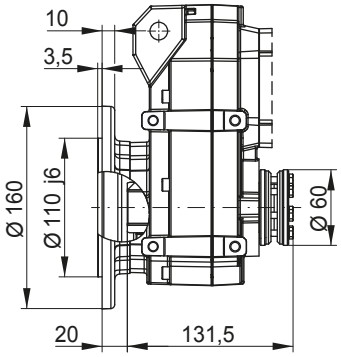

FT02 - Hollow shaft with rubber buffer

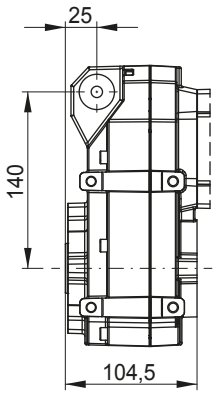

FU02 - Hollow shaft with shrink disc * and rubber buffer

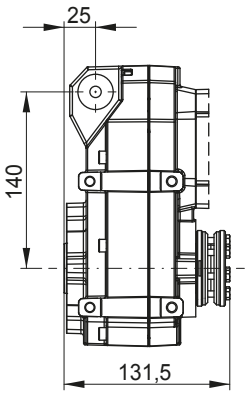

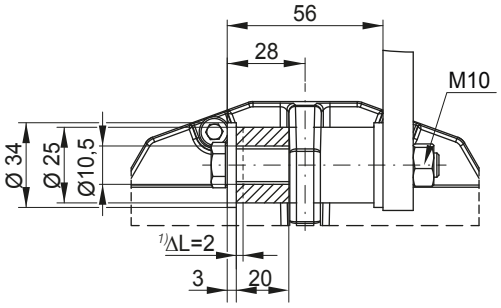

Dimensions in mm.

** Shrink disc only in combination with motor frame sizes 63 and 71*
Protection cap for shrink disc never possible

1) ΔL = recommended preload

FH03 - Hollow shaft

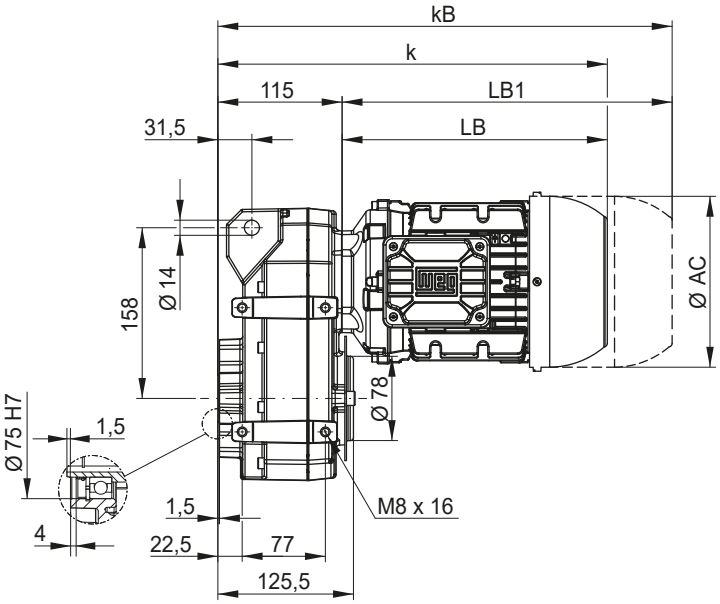

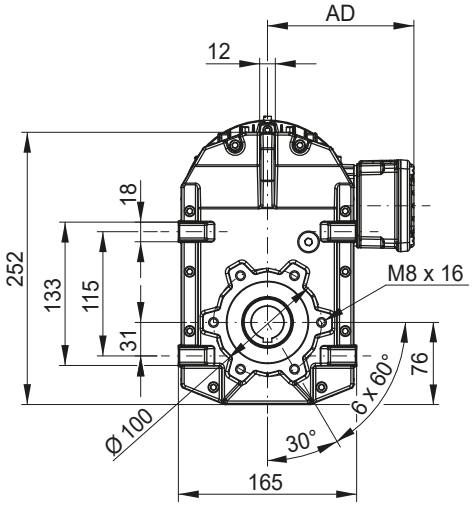

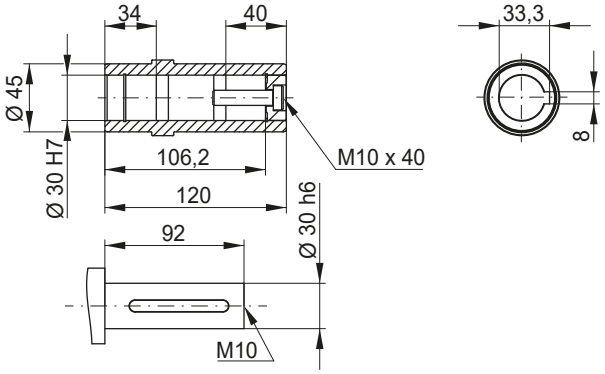

FD03 - Shrink disc *

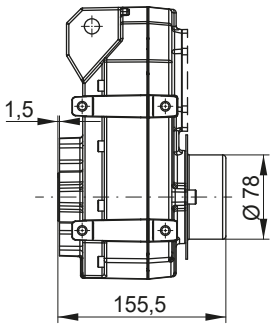

FS03 - Output shaft
FB03 - Output shaft on both sides

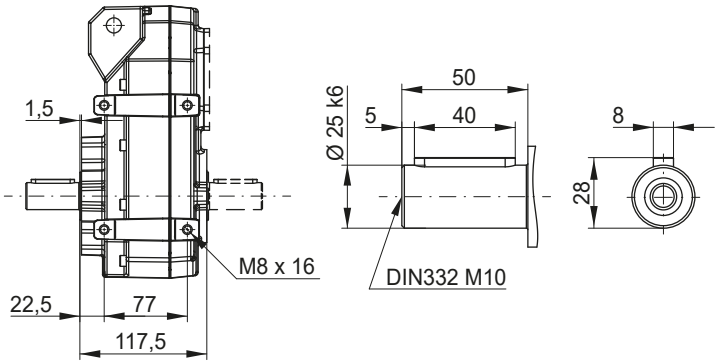

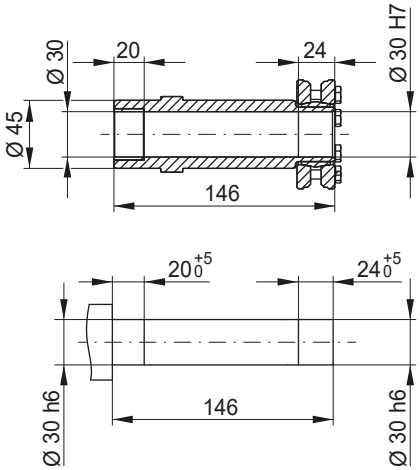

Motor fr. / Dimension	63	71	80	90S/L	100L	L100L
AC	126	141	159	178	199	199
AD	128	136	145	155	165	165
k	319	353	361	403	453	491
kB	363	402	419	476	537	575
LB	204	238	246	288	338	376
LB1	248	287	304	361	422	460

Motor dimension sheets see page 266. Description of motor lengths LB and LB1 see page 270.

FO03 - B5 flange execution with hollow shaft

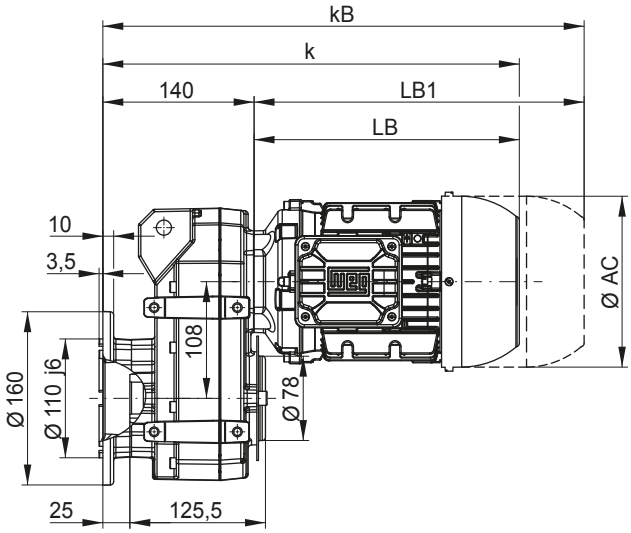

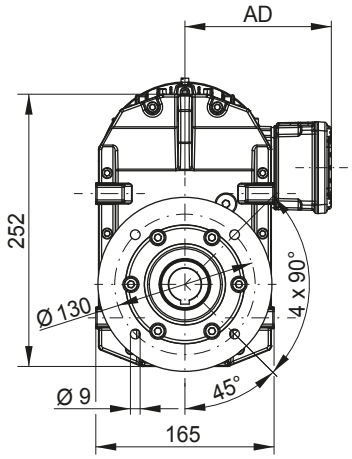

FF03 - B5 flange execution with output shaft

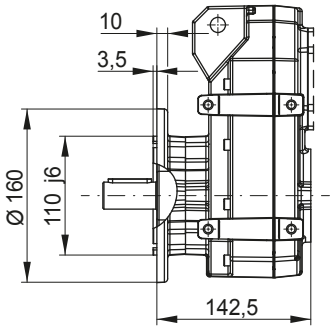

FP03 - B5 flange execution with hollow shaft and shrink disc *

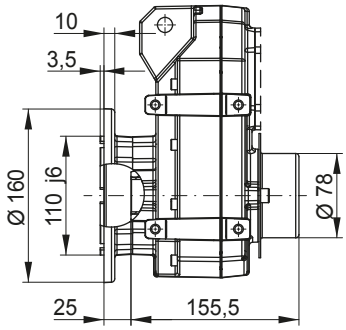

FT03 - Hollow shaft with rubber buffer

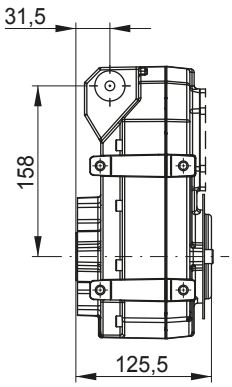

FU03 - Hollow shaft with shrink disc * and rubber buffer

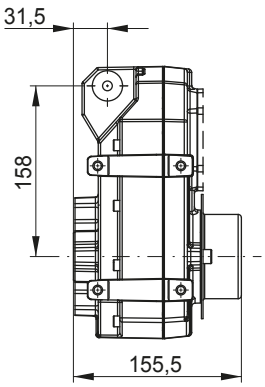

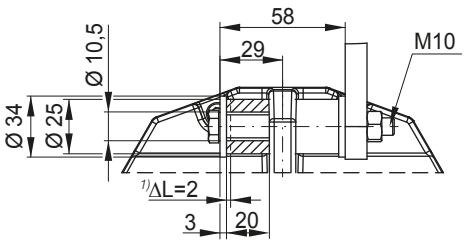

Dimensions in mm.

** Shrink disc only in combination with motor frame sizes 63 and 71*

1) ΔL = recommended preload

FH04 - Hollow shaft

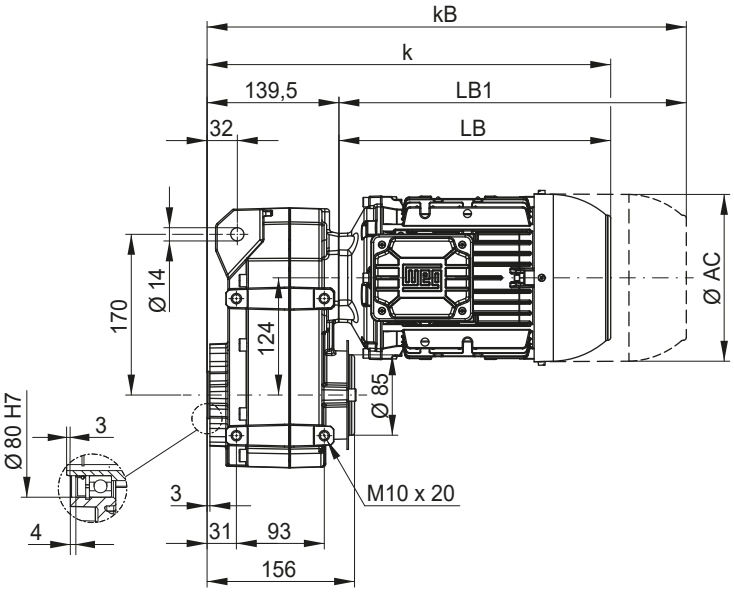

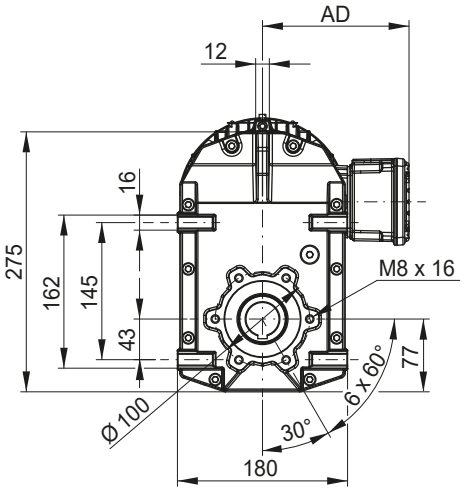

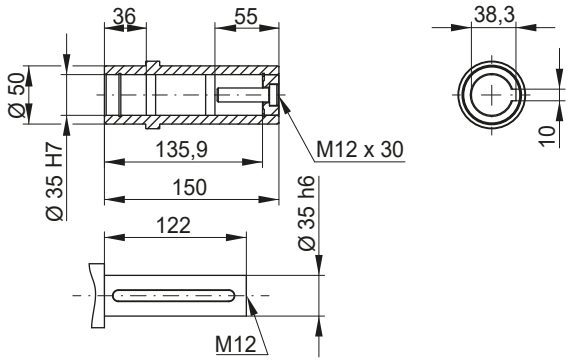

FD04 - Shrink disc *

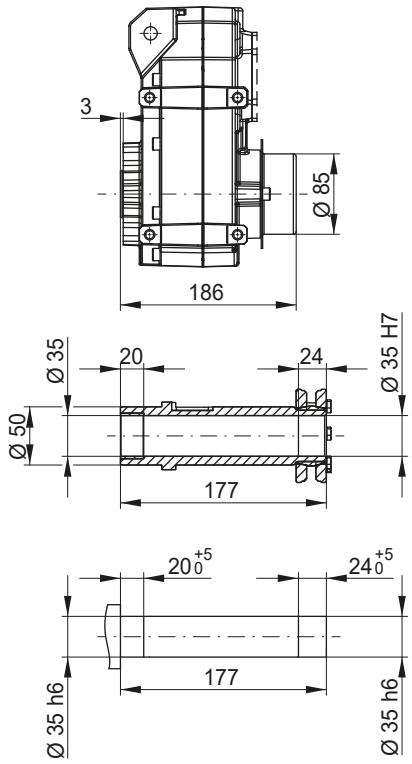

FS04 - Output shaft
FB04 - Output shaft on both sides

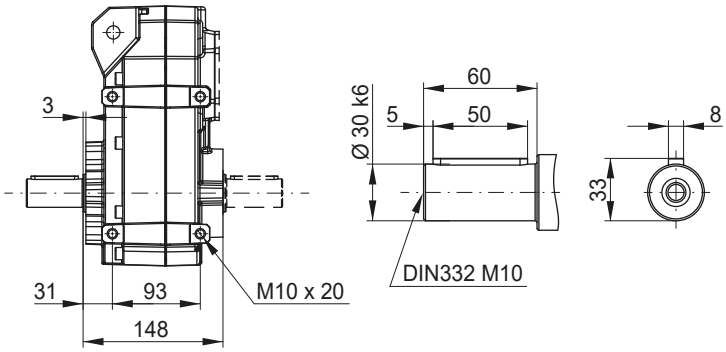

Motor fr. / Dimension	63	71	80	90S/L	100L	L100L
AC	126	141	159	178	199	199
AD	128	136	145	155	165	165
k	344	378	386	428	478	516
kB	388	427	444	501	562	600
LB	204	238	246	288	338	376
LB1	248	287	304	361	422	460

Motor dimension sheets see page 266. Description of motor lengths LB and LB1 see page 270.

FO04 - B5 flange execution with hollow shaft

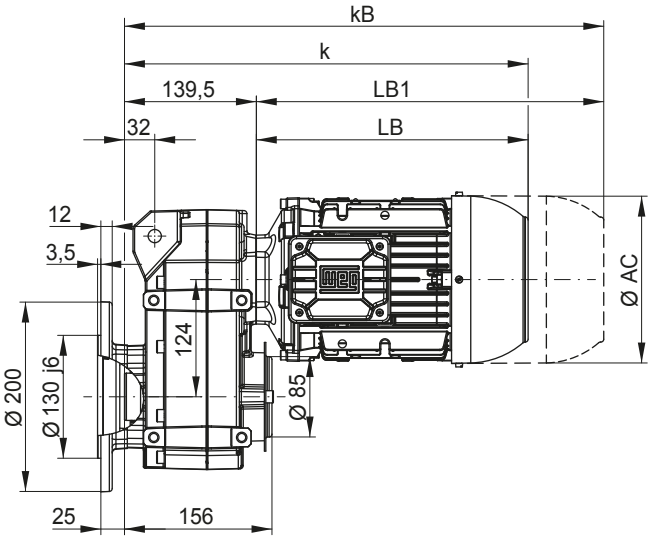

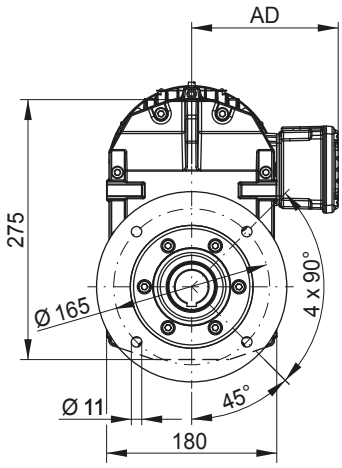

FF04 - B5 flange execution with output shaft

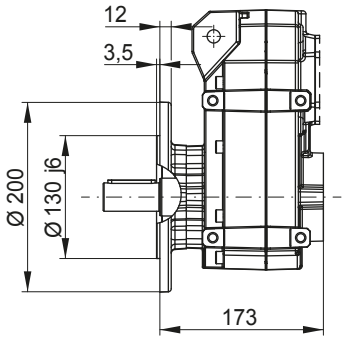

FP04 - B5 flange execution with hollow shaft and shrink disc *

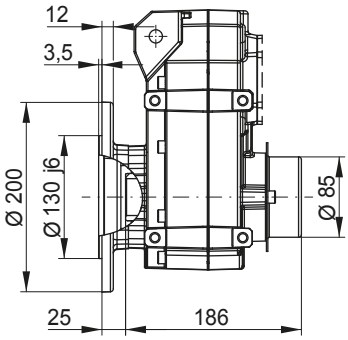

FT04 - Hollow shaft with rubber buffer

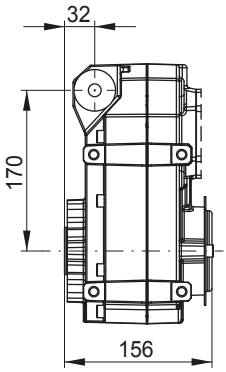

FU04 - Hollow shaft with shrink disc * and rubber buffer

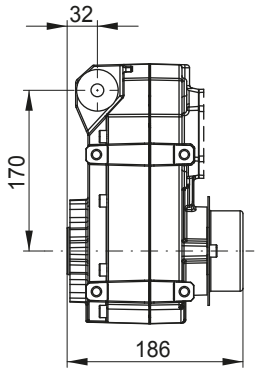

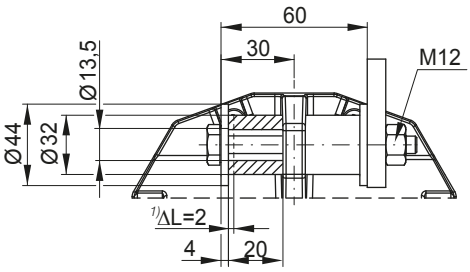

Dimensions in mm.

** Shrink disc only in combination with motor frame sizes 63, 71 and 80*

1) ΔL = recommended preload

FH05 - Hollow shaft

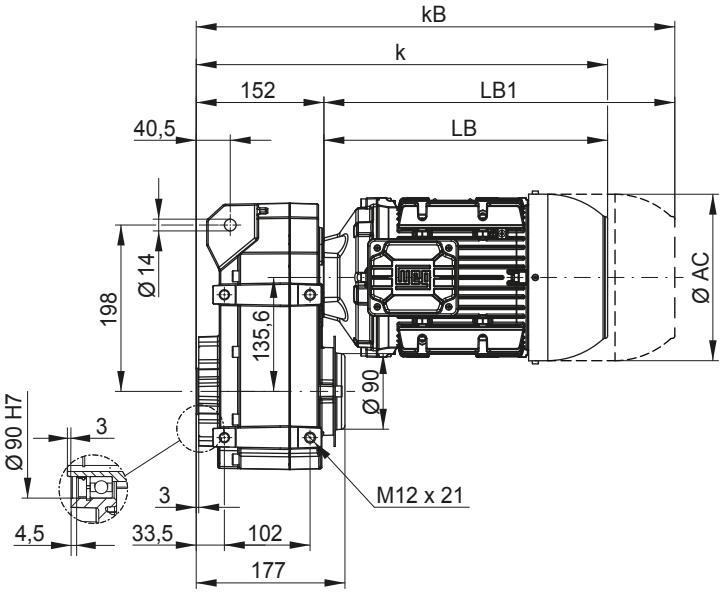

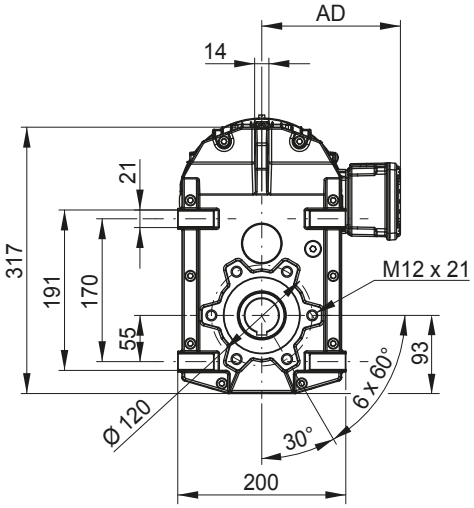

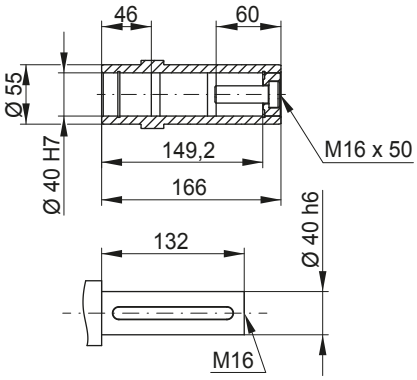

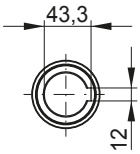

FD05 - Shrink disc *

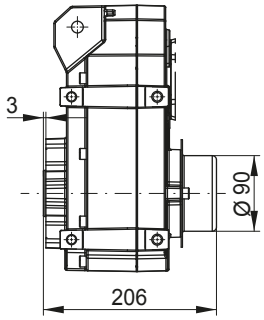

FS05 - Output shaft
FB05 - Output shaft on both sides

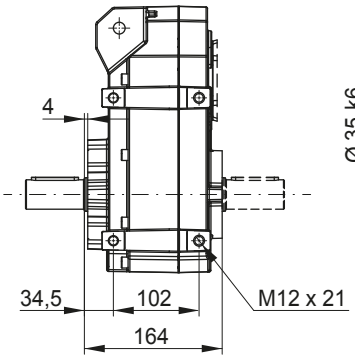

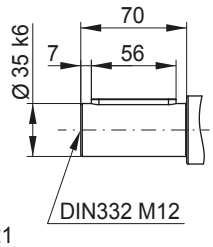

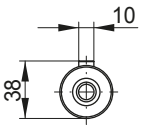

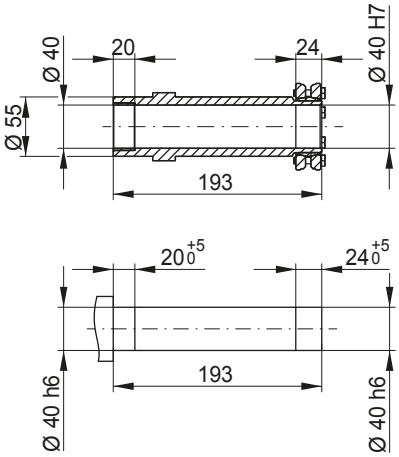

Motor fr. / Dimension	63	71	80	90S/L	100L	L100L	112M	132S,M	L132M
AC	126	141	159	178	199	199	221	261	261
AD	128	136	145	155	165	165	185	205	205
k	356	390	398	440	490	528	500	565	603
kB	400	439	456	513	574	612	587	683	721
LB	204	238	246	288	338	376	348	413	451
LB1	248	287	304	361	422	460	435	531	569

Motor dimension sheets see page 266. Description of motor lengths LB and LB1 see page 270.

FO05 - B5 flange execution with hollow shaft

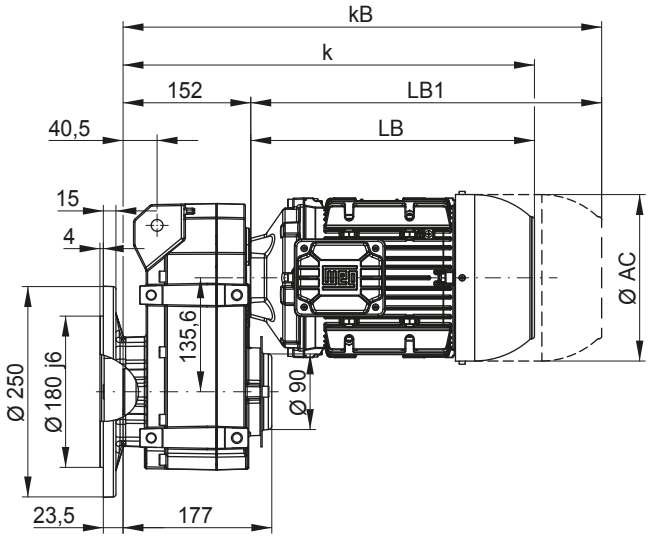

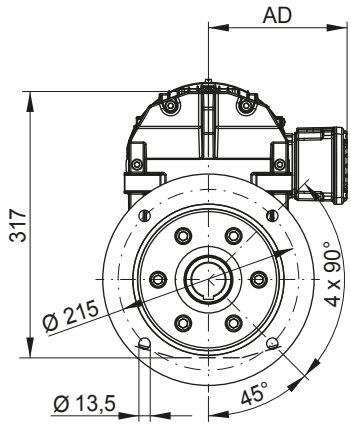

FF05 - B5 flange execution with output shaft

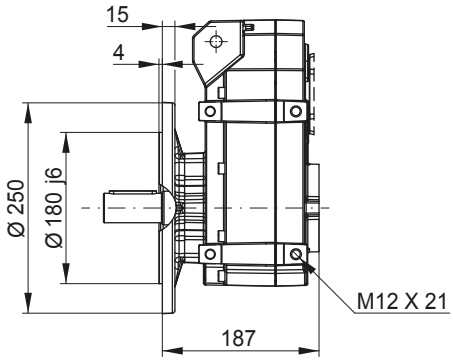

FP05 - B5 flange execution with hollow shaft and shrink disc *

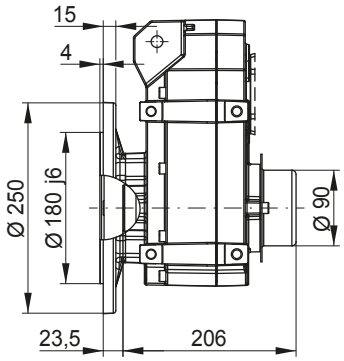

FT05 - Hollow shaft with rubber buffer

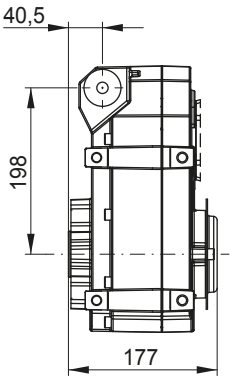

FU05 - Hollow shaft with shrink disc * and rubber buffer

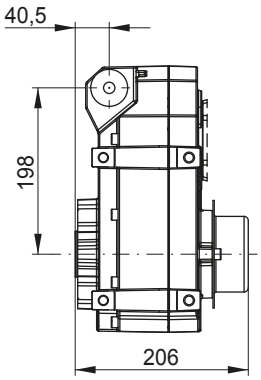

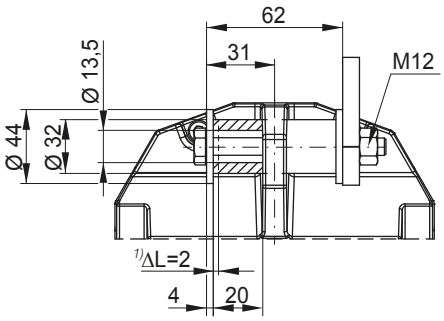

Dimensions in mm.

** Shrink disc only in combination with motor frame sizes 63, 71, 80 and 90*

1) ΔL = recommended preload

FH06 - Hollow shaft

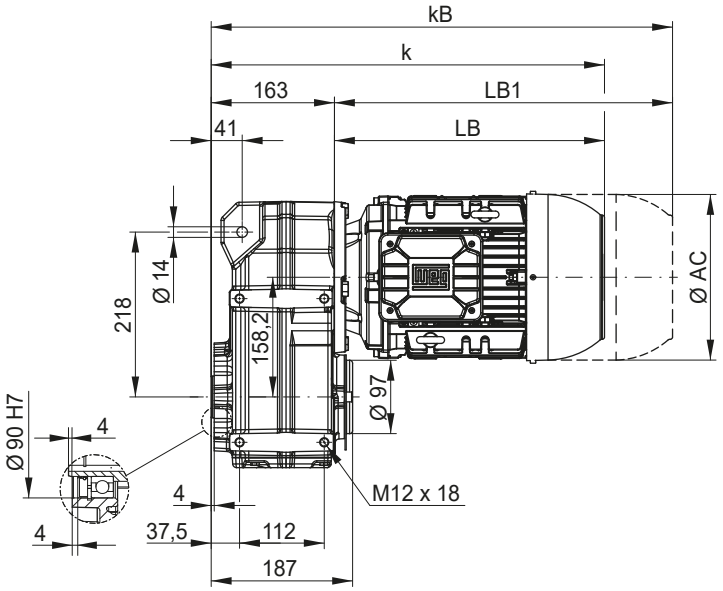

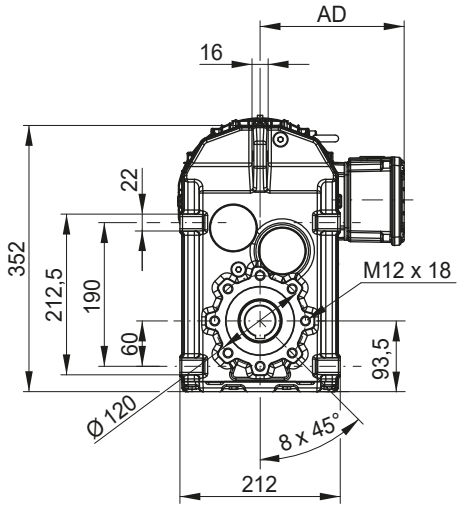

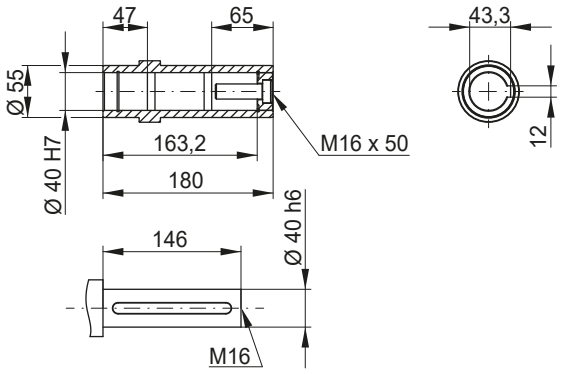

FD06 - Shrink disc *

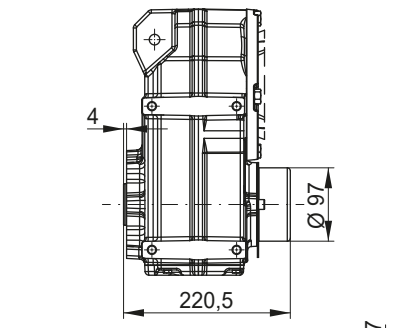

FS06 - Output shaft
FB06 - Output shaft on both sides

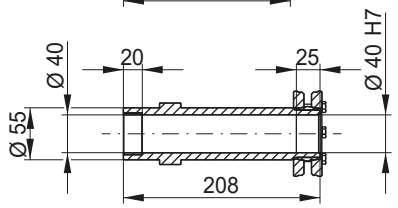

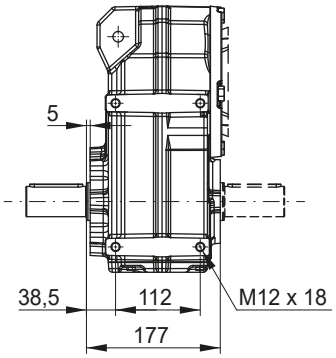

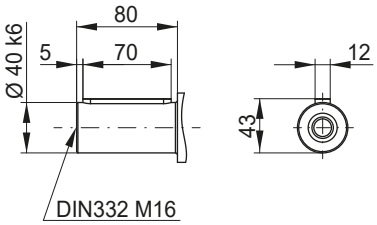

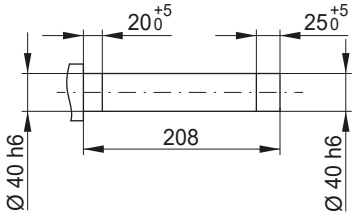

Motor fr. / Dimension	63	71	80	90S/L	100L	L100L	112M	132S,M	L132M	160M	160L
AC	126	141	159	178	199	199	221	261	261	318	318
AD	128	136	145	155	165	165	185	205	205	266	266
k	367	401	409	451	501	539	511	576	614	708	752
kB	411	450	467	524	585	623	598	694	732	832	876
LB	204	238	246	288	338	376	348	413	451	545	589
LB1	248	287	304	361	422	460	435	531	569	669	713

Motor dimension sheets see page 266. Description of motor lengths LB and LB1 see page 270.

FO06 - B5 flange execution with hollow shaft

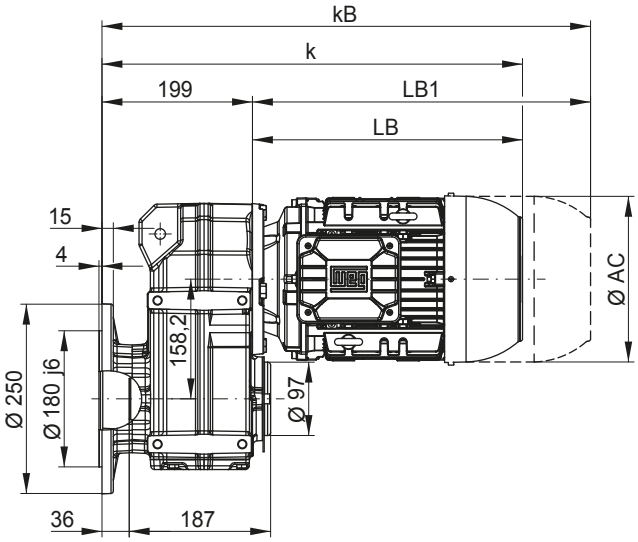

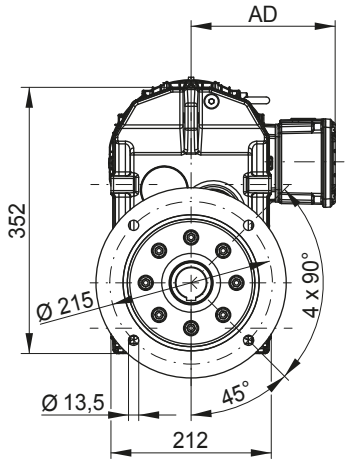

FF06 - B5 flange execution with output shaft

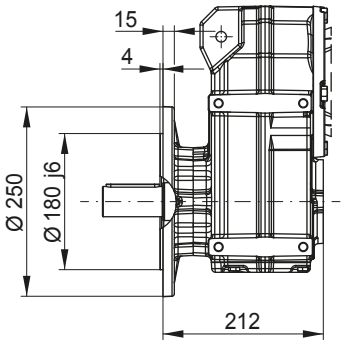

FP06 - B5 flange execution with hollow shaft and shrink disc *

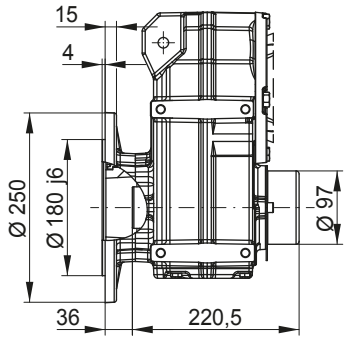

FT06 - Hollow shaft with rubber buffer

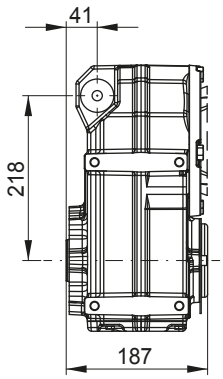

FU06 - Hollow shaft with shrink disc * and rubber buffer

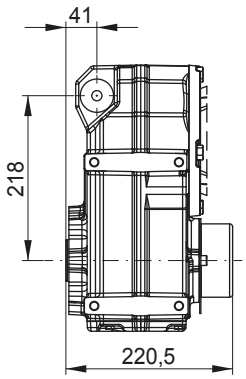

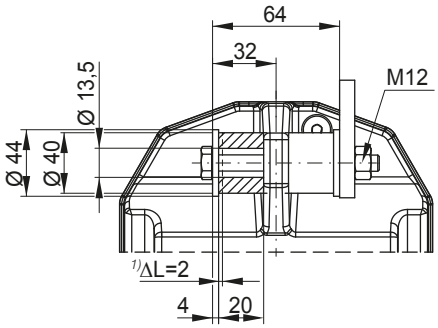

Dimensions in mm.

** Shrink disc only in combination with motor frame sizes 63, 71, 80, 90, 100 and 112*

1) ΔL = recommended preload

FH07 - Hollow shaft

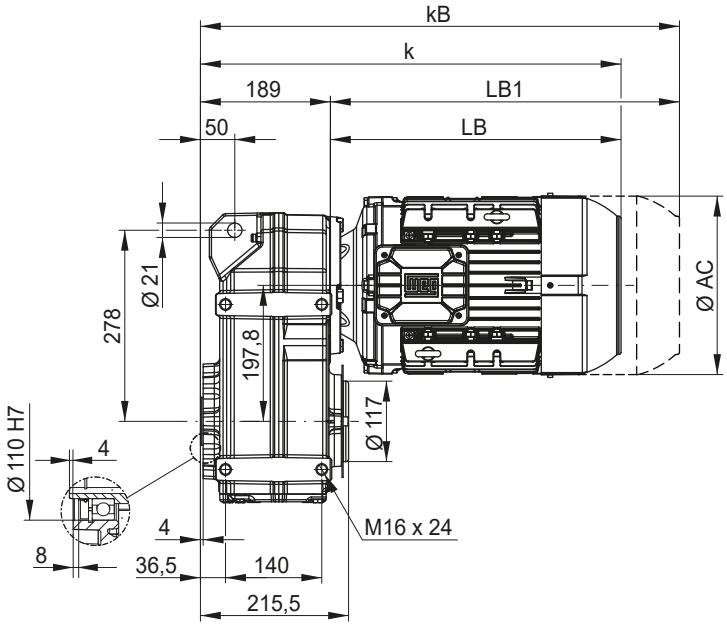

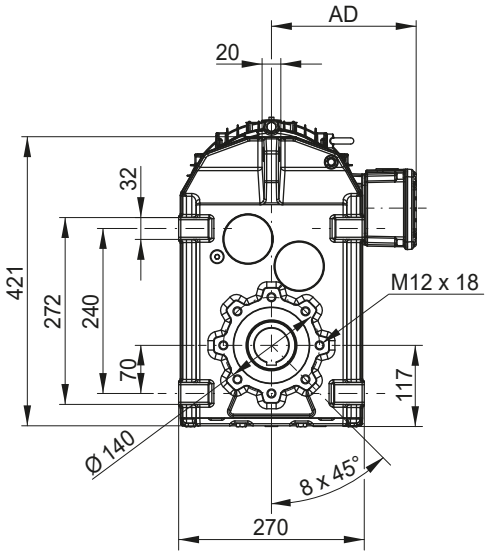

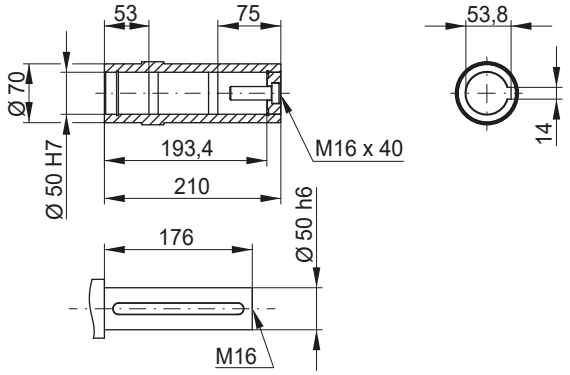

FD07 - Shrink disc *

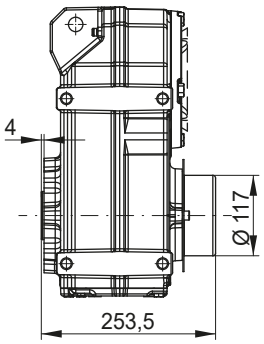

FS07 - Output shaft
FB07 - Output shaft on both sides

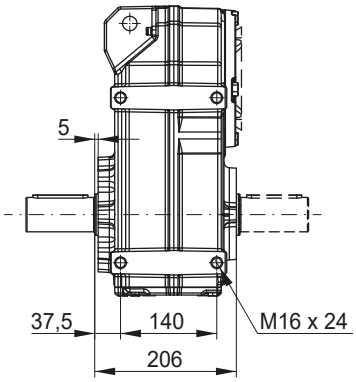

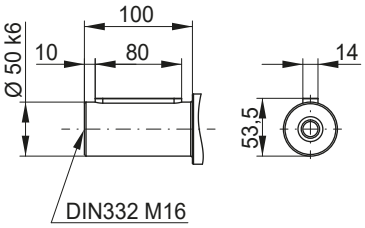

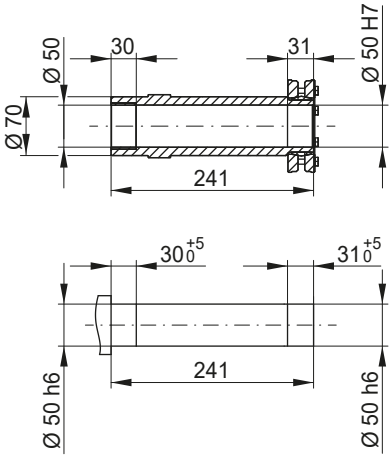

Motor fr. / Dimensions	63	71	80	90S/L	100L	L100L	112M	132S,M	L132M	160M	160L
AC	126	141	159	178	199	199	221	261	261	318	318
AD	128	136	145	155	165	165	185	205	205	266	266
k	393	427	435	477	527	565	537	602	640	734	778
kB	437	476	493	550	611	649	624	720	758	858	902
LB	204	238	246	288	338	376	348	413	451	545	589
LB1	248	287	304	361	422	460	435	531	569	669	713

Motor dimension sheets see page 266. Description of motor lengths LB and LB1 see page 270.

FO07 - B5 flange execution with hollow shaft

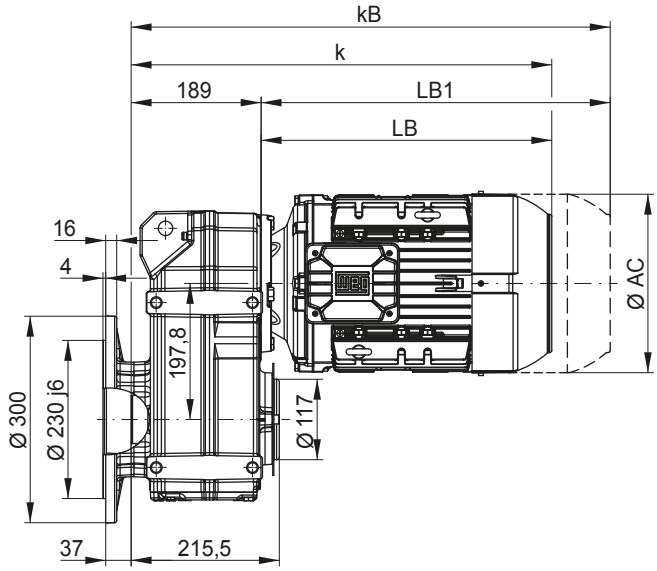

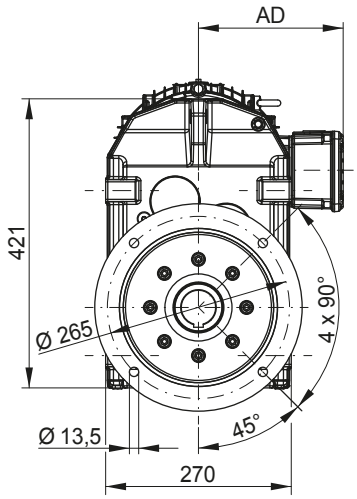

FF07 - B5 flange execution with output shaft

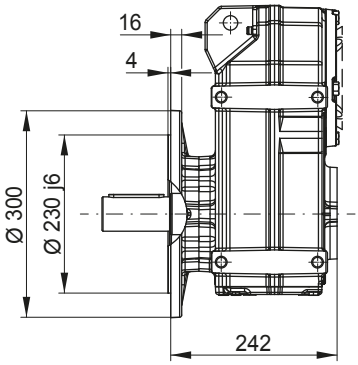

FP07 - B5 flange execution with hollow shaft and shrink disc *

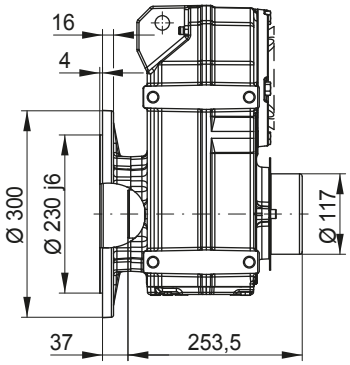

FT07 - Hollow shaft with rubber buffer

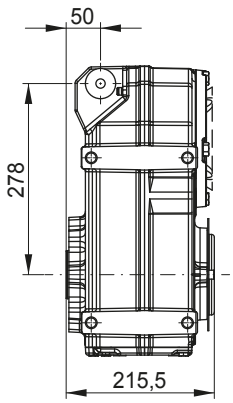

FU07 - Hollow shaft with shrink disc * and rubber buffer

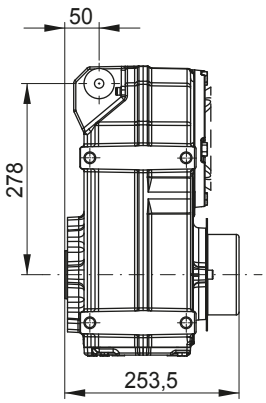

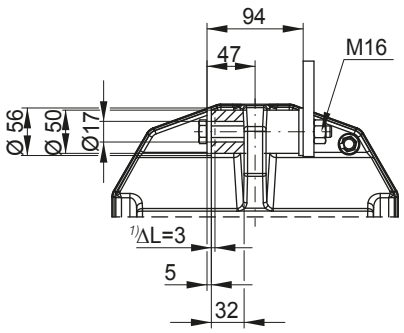

Dimensions in mm.

** Shrink disc and protection cap possible with all mountable motors.*

1) ΔL = recommended preload

FH08 - Hollow shaft

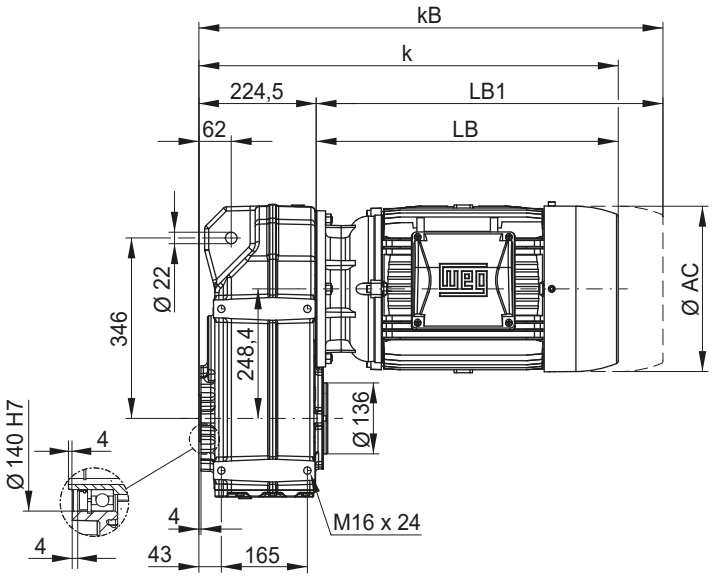

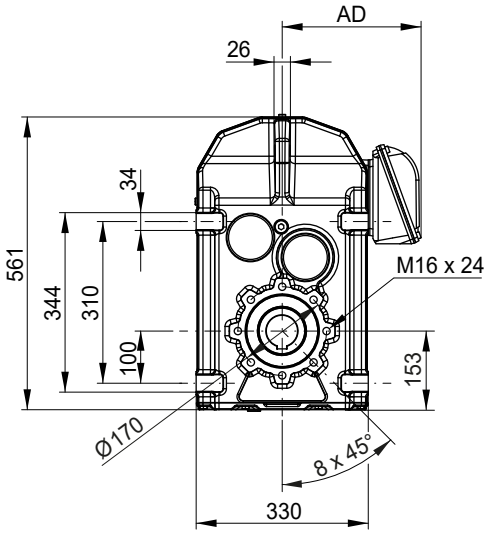

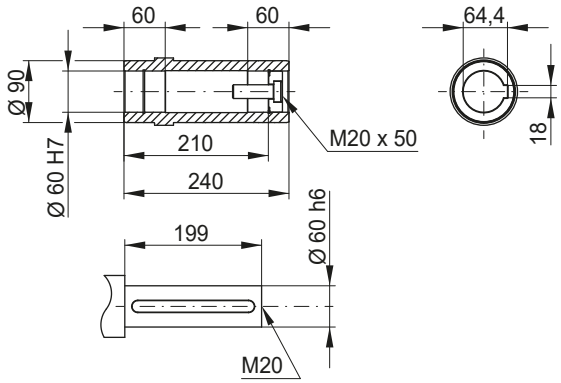

FD08 - Shrink disc *

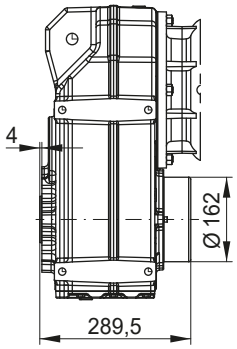

FS08 - Output shaft
FB08 - Output shaft on both sides

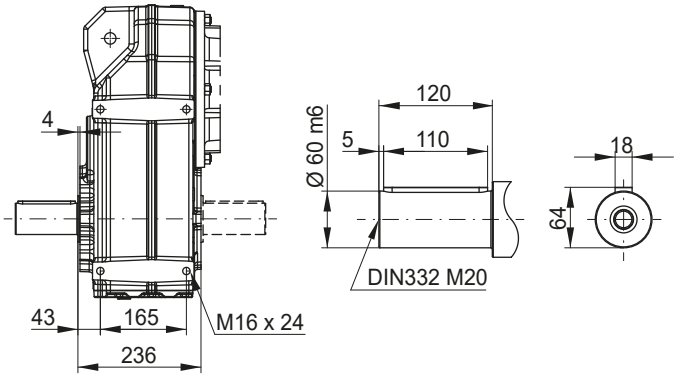

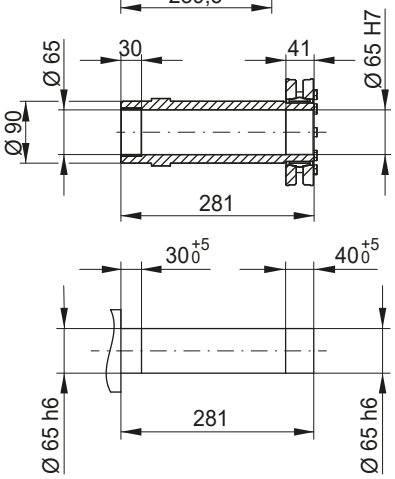

Motor fr. / Dimensions	63	71	80	90S/L	100L	L100L	112M	132S,M	L132M	160M	160L	180M	180L
AC	126	141	159	178	199	199	221	261	261	318	318	347	347
AD	128	136	145	155	165	165	185	205	205	266	266	281	281
k	429	463	471	513	563	601	573	638	676	760	804	828	866
kB	473	512	529	586	647	685	660	756	794	884	928	946	984
LB	204	238	246	288	338	376	348	413	451	535	579	603	641
LB1	248	287	304	361	422	460	435	531	569	659	703	721	759

Motor dimension sheets see page 266. Description of motor lengths LB and LB1 see page 270.

FO08 - B5 flange execution with hollow shaft

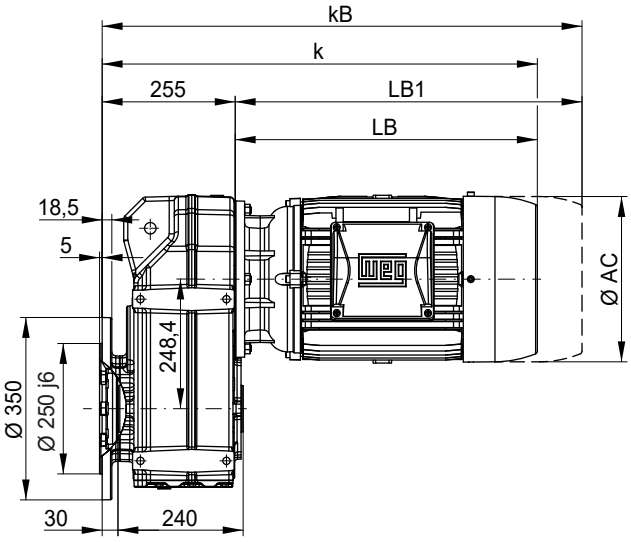

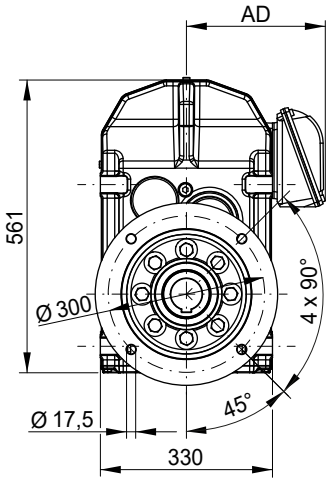

FF08 - B5 flange execution with output shaft

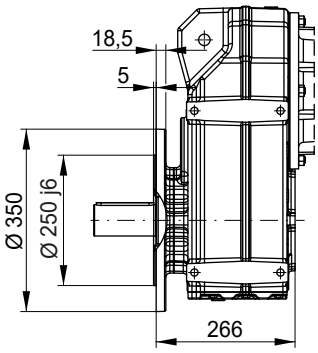

FP08 - B5 flange execution with hollow shaft and shrink disc *

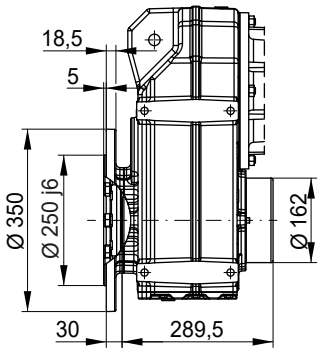

FT08 - Hollow shaft with rubber buffer

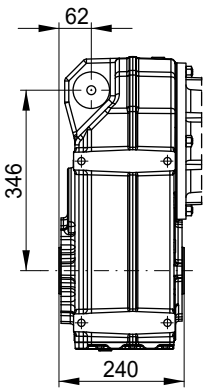

FU08 - Hollow shaft with shrink disc * and rubber buffer

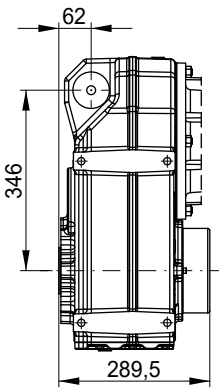

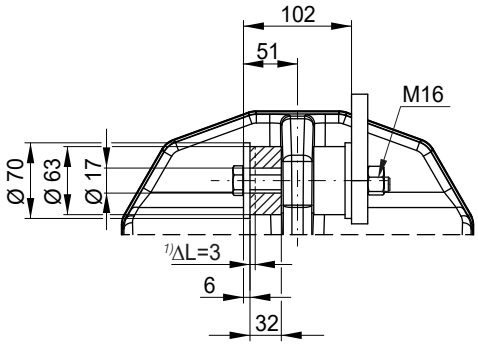

Dimensions in mm.

** Shrink disc and protection cap possible with all mountable motors.*

1) ΔL = recommended preload

FH09 - Hollow shaft

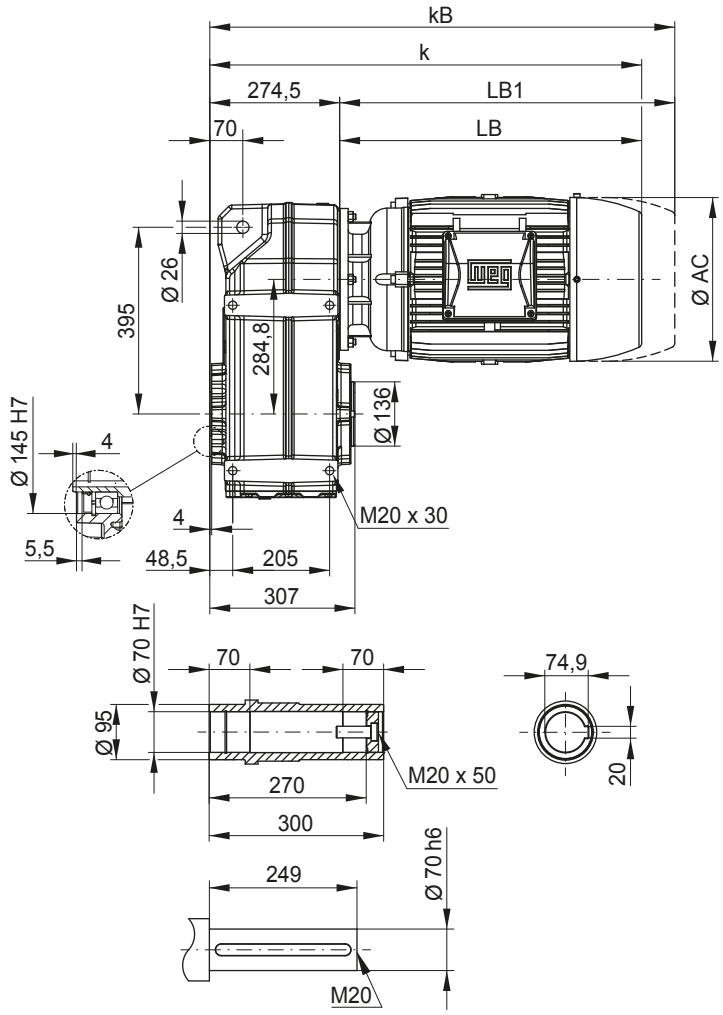

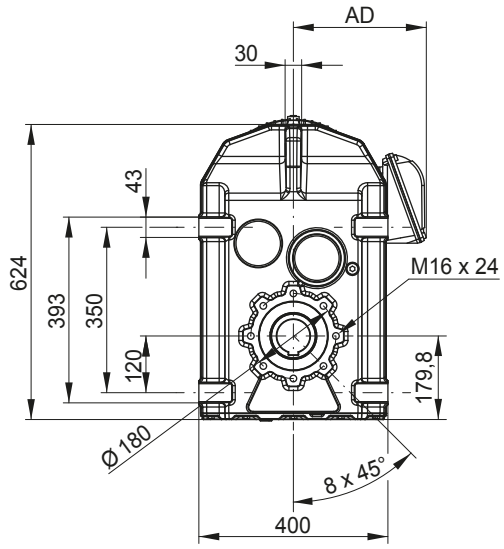

FD09 - Shrink disc *

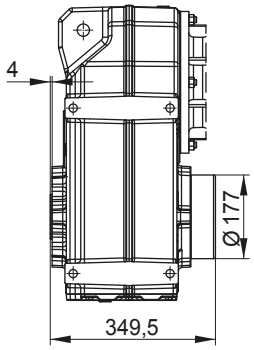

FS09 - Output shaft
FB09 - Output shaft on both sides

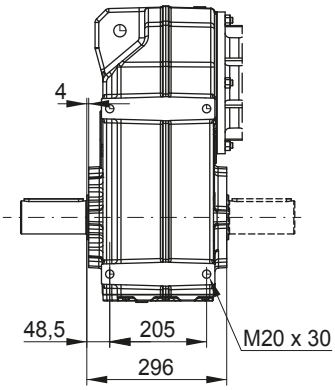

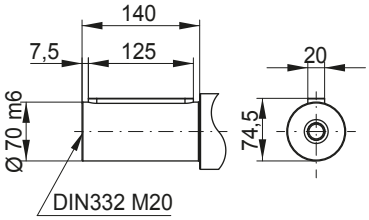

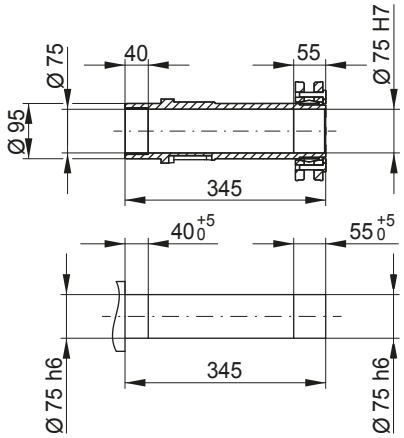

Motor fr. / Dimensions	63	71	80	90S/L	100L	L100L	112M	132S,M	L132M	160M	160L	180M	180L	200L
AC	126	141	159	178	199	199	221	261	261	318	318	347	347	386
AD	128	136	145	155	165	165	185	205	205	266	266	281	281	317
k	479	513	521	563	613	651	623	688	726	810	854	878	916	1007
kB	523	562	579	636	697	735	710	806	844	934	978	996	1034	1133
LB	204	238	246	288	338	376	348	413	451	535	579	603	641	732
LB1	248	287	304	361	422	460	435	531	569	659	703	721	759	858

Motor dimension sheets see page 266. Description of motor lengths LB and LB1 see page 270.

FO09 - B5 flange execution with hollow shaft

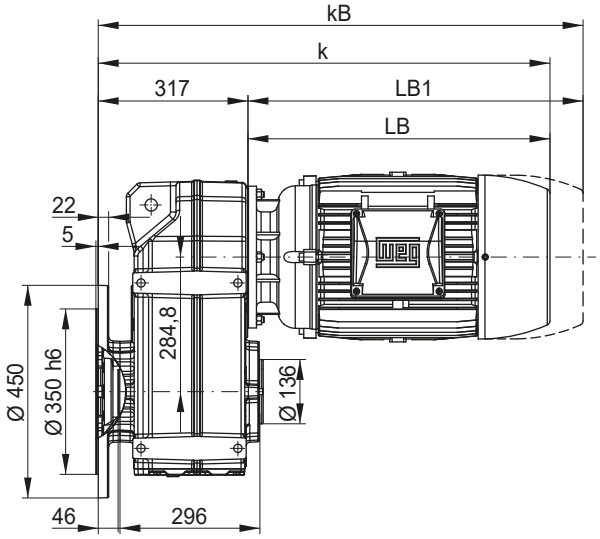

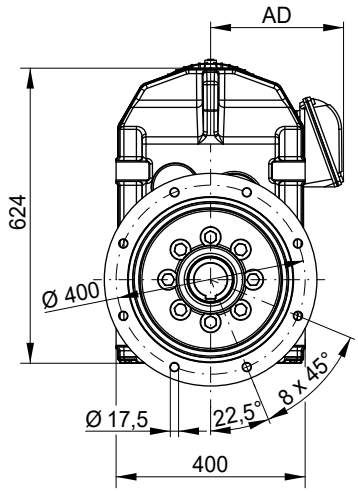

FF09 - B5 flange execution with output shaft

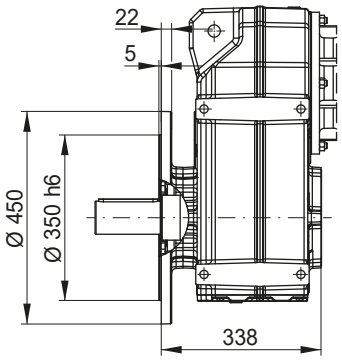

FP09 - B5 flange execution with hollow shaft and shrink disc *

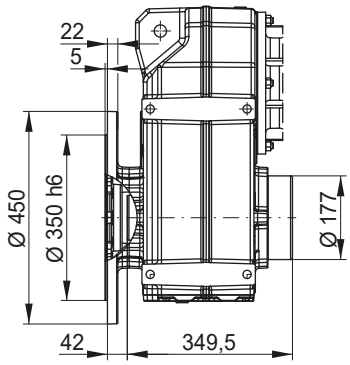

FT09 - Hollow shaft with rubber buffer

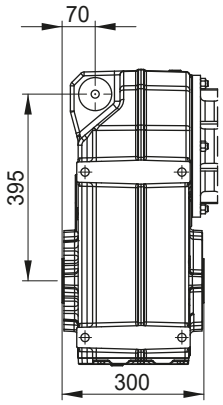

FU09 - Hollow shaft with shrink disc * and rubber buffer

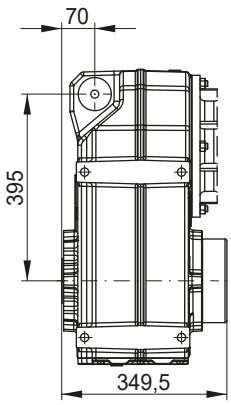

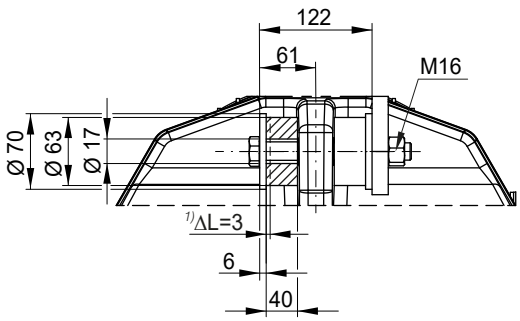

Dimensions in mm.

** Shrink disc and protection cap possible with all mountable motors.*

1) ΔL = recommended preload

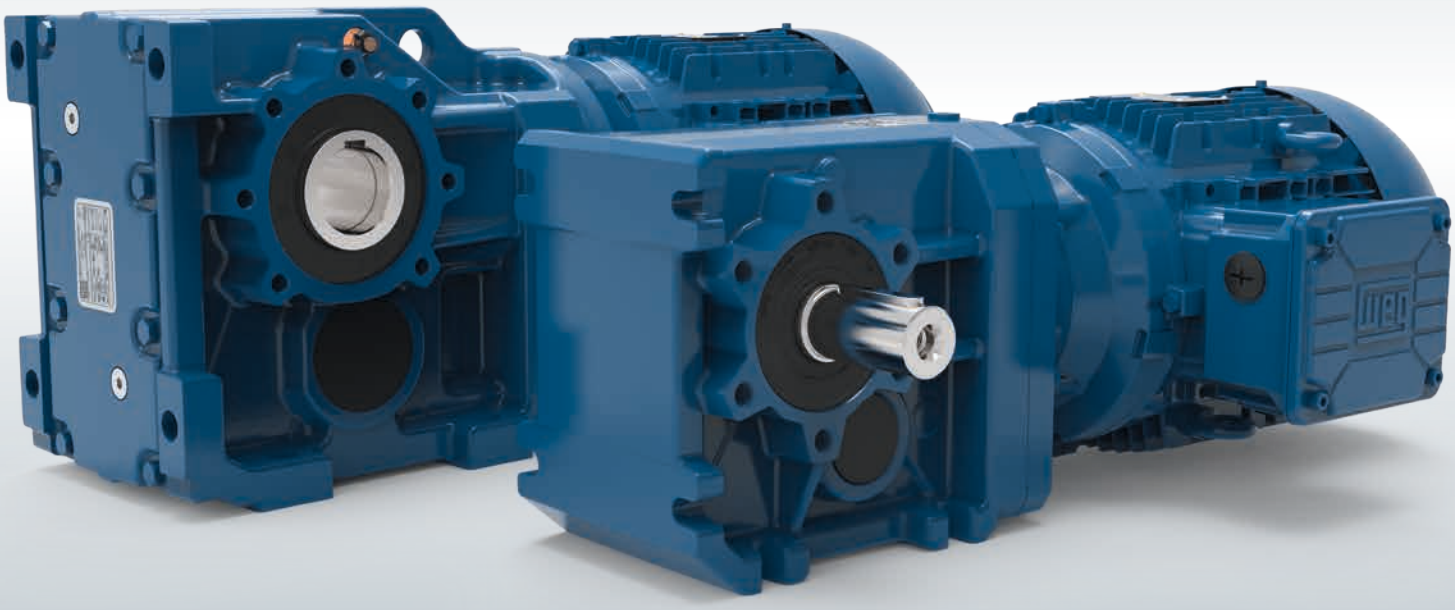

Helical bevel geared motors K

Technical data

Size		K02	K03	K04	K05	K06	K07	K08	K09
Power		0.12 - 1.5 kW	0.12 - 3 kW	0.12 - 4 kW	0.12 - 9.2 kW	0.18 - 9.2 kW	0.25 - 15 kW	0.55 - 22 kW	1.1 - 30 kW
Torque		110 Nm	200 Nm	400 Nm	600 Nm	820 Nm	1550 Nm	3000 Nm	4500 Nm
Ratio		3.82 - 68.88	4.17 - 217.88	5.05 - 277.79	4.27 - 245.7	4.94 - 198	7.91 - 256.14	7.45 - 206.12	6.94 - 169.25
Number of stages		2	3	3	3	3	3	3	3
Housing material		aluminium				cast iron			
Solid shaft	Type	with key acc. to DIN 6885.1 and threaded bore acc. to DIN 332 sheet 2							
	Tolerance	< Ø 55: k6 / ≥ Ø 55: m6							
	Material	standard: C45E (1.1191) / stainless steel on request							
Hollow shaft	Type	with key acc. to DIN 6885.1							
	Tolerance	H7							
	Material	standard: C45E (1.1191) / stainless steel on request							
Flanges	Tolerance	centring ≤ 250: j6 / > 250: h6 acc. to DIN EN 50347							
	Material	cast iron							
Gear wheels	Type	honed							
	Material	16MnCr5 (1.7131) case hardened – minimum 58HRC							
Shaft seals	Type	type AS acc. to DIN 3760							
	Material	standard NBR / special FKM							
Bearing		standard / reinforced							
Lubricants	Type	standard CLP 220 / special CLP HC 220							
	Quantity	depending on mounting position							
Axle height		acc. to DIN 747: ≤ 50: -0.4; > 50 bis ≤ 250: -0.5; > 250: -1 **for foot-mounted geard motors, the motor may extend below the mounting surface**							

K

General information

1. Nameplate

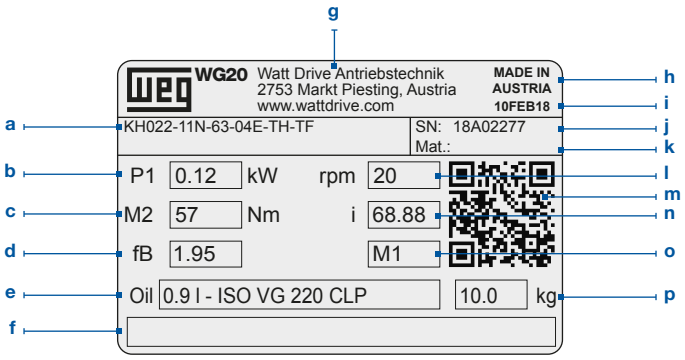

a	Type code	i	Production date
b	Motor power	j	Serial number
c	Output torque	k	Material number
d	Service factor	l	Output speed
e	Type and quantity of lubricant	m	QR-Code linked online to additional information
f	Space for additional information	n	Total gear ratio
g	Manufacturer address	o	Mounting position
h	Country of origin	p	Weight

2. Type code

KH073-11P-90S/L-04F ...

1 2 3 4 5 6 7 8 9

1	Type:	K = Helical bevel gear unit
2	Design:	B = Output shaft on both sides D = Hollow shaft with shrink disc F = B5 flange type with output shaft H = Hollow shaft O = B5 flange type with hollow shaft P = B5 flange type with hollow shaft and shrink disc S = Output shaft T = Hollow shaft with torque arm U = Hollow shaft with shrink disc and torque arm
3	Size:	02 03 04 05 06 07 08 09
4	Number of stages:	2 = 2 gear stages 3 = 3 gear stages
5	Motor type:	11N = Integral motor aluminium IE1 11P = Integral motor aluminium IE3 22P = Integral motor cast iron IE3
6	Motor frame size:	63 71 80 90S/L 100L L100L 112M 132S 132M L132M 160M 160L 180M 180L 200L
7	Number of poles:	04 = 4 poles 06 = 6 poles
8	Power indicator:	D E F G
9	Motor modules:	see from page 271

K

3. Range

Size	K02	K03	K04	K05	K06	K07	K08	K09
Housing material	Aluminium				Cast iron			

4. Design

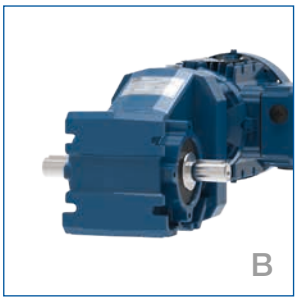

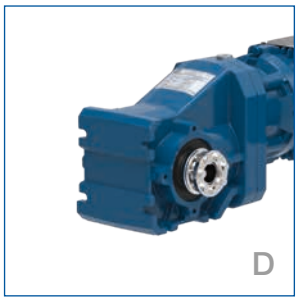

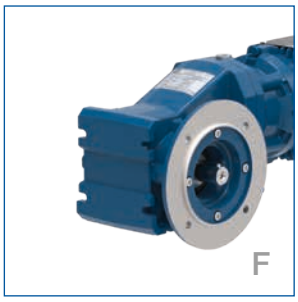

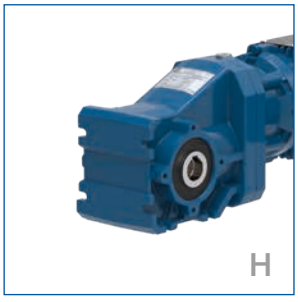

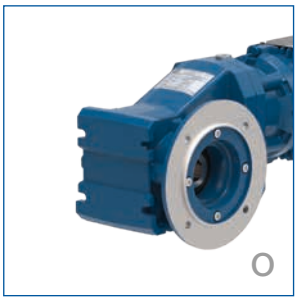

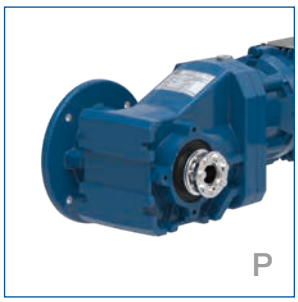

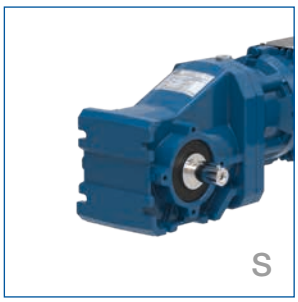

B	Output shaft on both sides
D	Hollow shaft with shrink disc
F	B5 flange type with output shaft
H	Hollow shaft
O	B5 flange type with hollow shaft

P	B5 flange type with hollow shaft and shrink disc
S	Output shaft
T	Hollow shaft with torque arm
U	Hollow shaft with shrink disc and torque arm

5. Venting the gear unit

The helical bevel gear unit sizes K02 to K05 are neither equipped with a venting nor an oil drain screw. They are supplied with lifetime-lubrication.
By default, the helical bevel gear units K06 to K09 are equipped with venting screws with a safety strap for transportation (see illustration). The rubber strap (a) of the venting screw must be removed entirely before the initial startup. The venting screw is placed accordingly to the mounting position (see chapter Mounting positions, page 179)

6. Overhung and axial loads

The overhung loads (F_{rN}) indicated in the respective selection tables apply to gear units with the force acting on the shaft center (x=l/2). The permissible overhung loads listed are based on the least favourable loading direction and calculated for standard shafts and standard bearings. Other load directions and action can be calculated with equations Q1 to Q3. If transmission elements are placed on the output shaft, an appropriate factor (f_z) has to be taken into consideration when determining the overhung load.

Gear wheels	Sprockets		V-belts	Flat belts
f_z=1.1 (z≤17)	f_z=1.2 (z≤13)	f_z=1.1 (z>13)	f_z=1.8	f_z=2.5

Use the following equations Q1 and Q2 to calculate the permissible radial loads on the output shaft. Q3 is to calculate the real existing shaft loads for your application. The results are to be compared by using the equation Q4.

Q1	$F_{zL} = F_{rN} \cdot a_1$
Q2	$F_{zW} = F_W \cdot a_2$
Q3	$F_{Qvorh} = \frac{2 \cdot M_2}{d_0} \cdot f_z$
Q4	$F_{Qvorh} \leq F_{zL}$
	$F_{Qvorh} \leq F_{zW}$

Variable	Unit	Description
a_1		Load action factor - output shaft bearing from table 1
a_2		Load action factor - output shaft from table 1
d_0	[m]	Effective diameter of the transmission element
M_2	[Nm]	Geared motor output torque (from selection tables) or required calculated output torque
F_{zL}	[N]	Permissible overhung load for output shaft bearings
F_{zW}	[N]	Permissible overhung load for output shaft
F_{rN}	[N]	Permissible overhung load from selection tables
F_W	[N]	Permissible overhung load - Output shaft x=l/2 from table 2
F_{Qvorh}	[N]	Existing overhung load at gear shaft
f_z		Factor for transmission element
M_{max}	[Nm]	Highest possible output torque for coupling operation (table 2)

Always use both equations Q1 and Q2 for your calculations.

x / l						
0	0.25	0.5	0.75	1	1.5	2
a_1 → Equation Q1						
1.39	1.18	1.00	0.85	0.73	0.52	0.38
a_2 → Equation Q2						
2.00	2.00	1.00	0.55	0.38	0.23	0.17

Table 1: Load action factors a_1, a_2

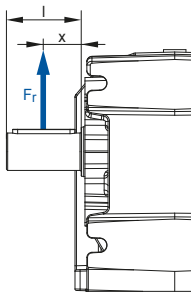

Intermediate values can be interpolated linearly. Combined load ($F_r \neq 0$; $F_a = 0$) on request.

	M_{max} at $F_r = 0$	Output torque M_2 [Nm]												
		50	100	200	300	400	600	820	1550	3000	4500	8000	13000	18000
		F_W [kN] at x/l = 0.5 → Equation Q2												
Ø 20x40	160	3.4	2.8											
Ø 25x50	300	5.9	5.7	4.8										
Ø 30x60	500		7.6	7.1	6.3	5.0								
Ø 35x70	800			11.0	11.0	10.0	8.3							
Ø 40x80	1170				14.0	13.0	12.0	10.7						
Ø 50x100	2250					24.0	24.0	23.0	20.0					
Ø 60x120	3740							31.0	30.0	23.0				
Ø 70x140	5850								44.0	41.0	36.0			
Ø 90x170	11700									72.0	70.0	61.0		
Ø 110x210	20800										106.0	103.0	93.0	
Ø 120x210	26700											129.0	121.0	109.0

Table 2: Permissible overhung load - output shaft x = l/2

In cases where there is no overhung load, the permissible axial load (push or pull) may be determined by taking 50 % of the permissible overhung loads indicated in the selection tables of the respective type of gear. If there are axial loads or radial and axial components acting on the drive which are extraordinarily high, we recommend to contact the manufacturer.

7. Mounting positions, Position of the terminal box and Cable entry

Mounting positions - Sizes K02 to K05

Gear units K02 to K05 are not ventilated and supplied with lifetime lubrication.

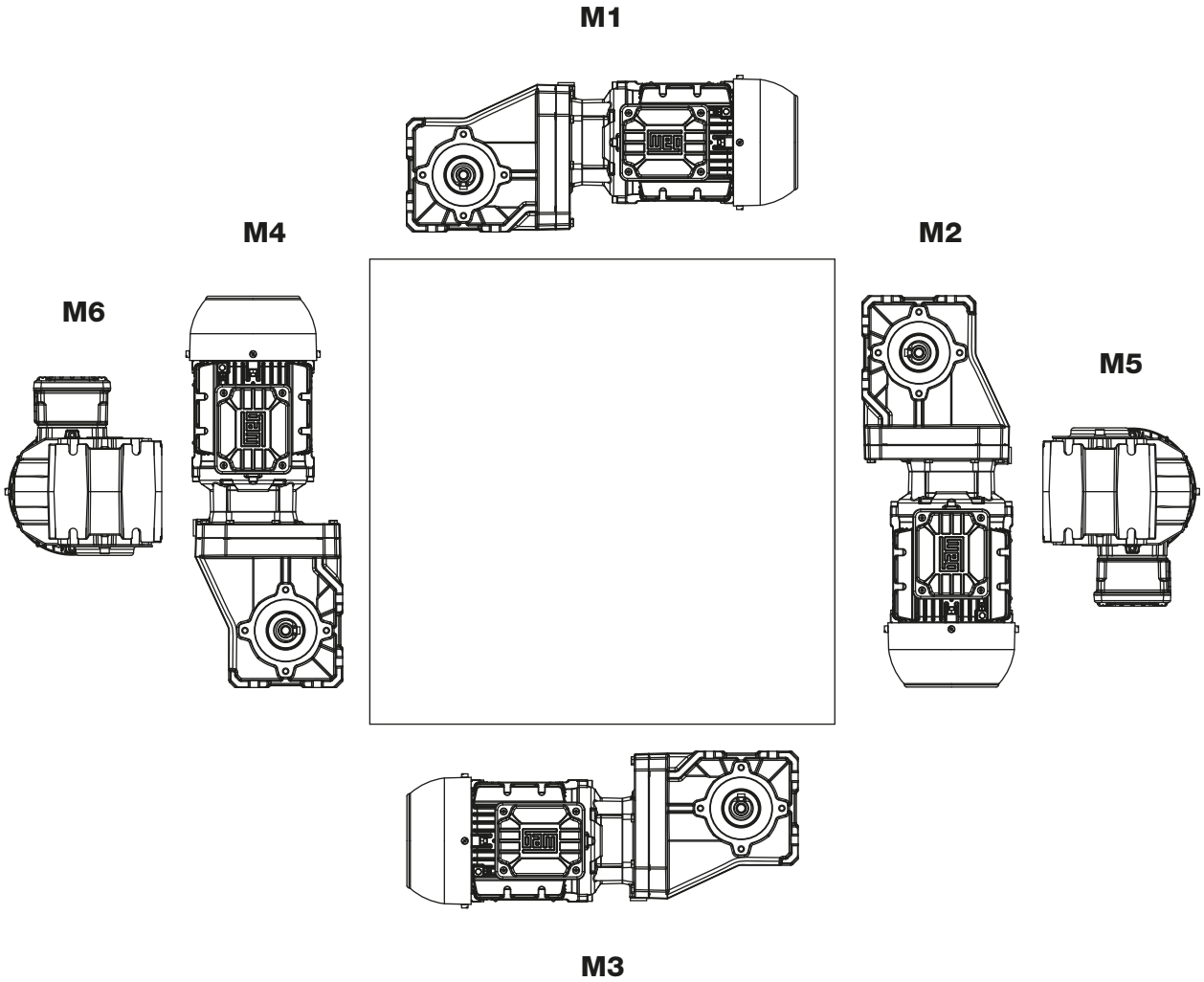

Position of the terminal box
Standard: Position 1

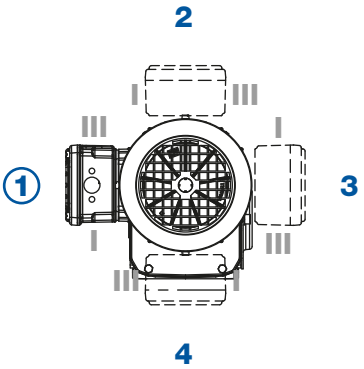

Cable entry
Standard: Position I

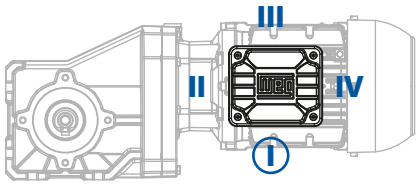

Side indication

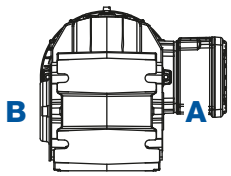

Mounting positions - Sizes K06 to K09

Position of the venting screw

Position of the oil drain screw

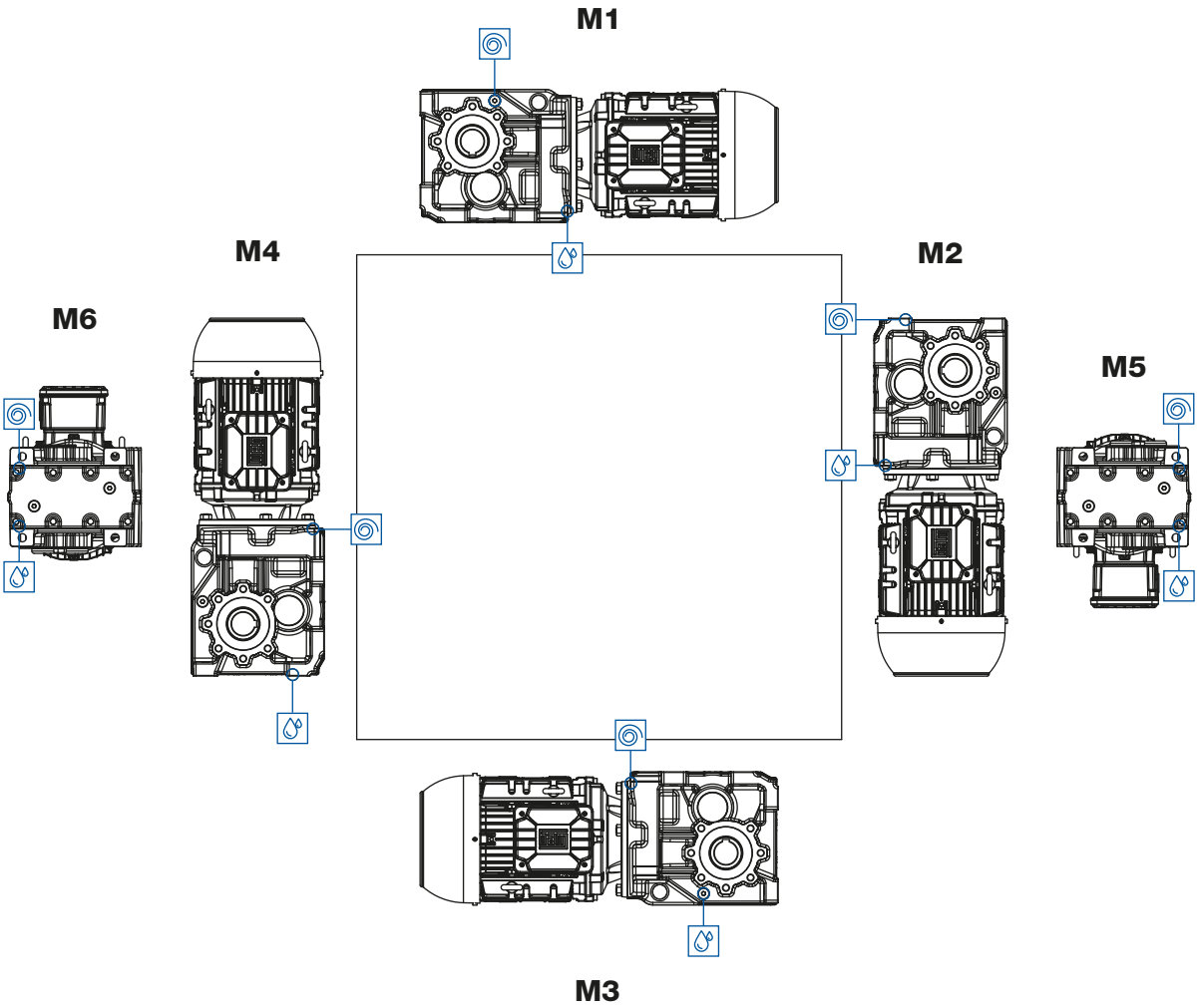

Position of the terminal box
Standard: Position 1

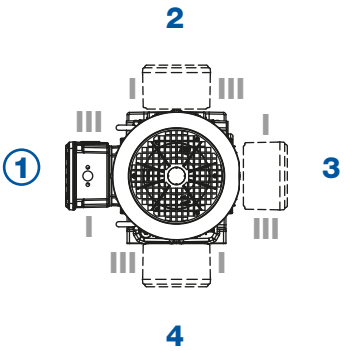

Cable entry
Standard: Position I

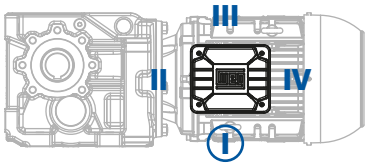

Side indication

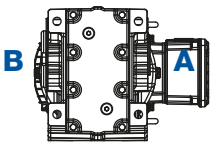

K

Selection tables - Geared motors

The technical data of the geared motors shown in the selection tables apply to an ambient temperature of +20 °C.

The selection tables are calculated with following motor data:

Power (IEC frame size)	Motor series (IE class)
up to 0.55 kW (63 - 80)	11N (IE1) - aluminium
0.75 - 9.2 kW (80 - 132)	11P (IE3) - aluminium
11 - 30 kW (160 - 200)	22P (IE3) - cast iron

Structure of the selection tables

1								2
P_N = 0.12 kW								IE1
50 Hz 0.12 kW	60 Hz 0.14 kW *)				at 50 Hz			
n_{50} min^{-1}	n_{60} min^{-1}	M_2 Nm	f_B	i	F_{rN} kN	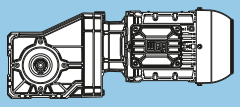	m kg	Dimension sheet see page
3	4	5	6	7	8	9	10	11

1 Rated power of the motor

2 Given values are based on the respective efficiency class

3 Output speed at 50 Hz

4 Output speed at 60 Hz

5 Output torque

6 Service factor

7 Total ratio

8 Permissible radial load at midpoint of the output shaft extension (standard bearing) at axial load=0

9 Geared motor type

10 Weight

11 Dimension sheet see page

*) Increased rated power at 60 Hz can only be reached together with increased voltage within the wide range (for details see page 254).

Increased rated power
1.2 x P_N

P_N = 0.12 kW								IE1
50 Hz 0.12 kW n_{50} min^{-1}	60 Hz 0.14 kW n_{60} min^{-1}	M_2 Nm	f_B	i	at 50 Hz F_{rN} kN	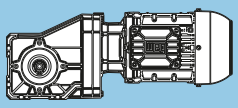	m kg	Dimension sheet see page
3.6	4.5	316	1.90	245.70	8.9	**KH053-11N-63-06F** **KO053-11N-63-06F**	20	232
4.6	5.7	251	2.40	194.73	9.2			
5.6	6.9	205	2.95	245.70	9.4	**KH053 11N 63-04E** **KO053 11N 63-04E**	19	232
3.2	4.0	358	1.15	277.79	4.6	**KH043-11N-63-06F** **KO043-11N-63-06F**	16	230
3.9	4.9	293	1.40	227.16	5.5			
5.0	6.2	231	1.75	179.37	6.1			
6.4	7.9	179	2.25	139.08	6.5			
7.8	9.7	147	2.75	113.83	6.7			
4.9	6.1	232	1.75	277.79	6.1	**KH043-11N-63-04E** **KO043-11N-63-04E**	16	230
6.1	7.5	189	2.15	227.16	6.5			
7.7	9.4	149	2.70	179.37	6.7			
5.0	6.2	228	0.90	177.19	**	**KH033-11N-63-06F** **KO033-11N-63-06F**	13	228
6.3	7.8	181	1.15	140.80	4.0			
8.2	10	140	1.45	108.75	4.5			
10	13	112	1.80	86.83	4.8			
12	15	93	2.20	71.93	4.9			
14	17	85	2.40	65.63	4.9			
15	19	75	2.70	58.50	5.0			
6.3	7.8	182	1.15	217.88	4.0	**KH033-11N-63-04E** **KO033-11N-63-04E**	12	228
7.8	9.6	148	1.40	177.19	4.4			
9.8	12	117	1.75	140.80	4.7			
13	16	91	2.25	108.75	4.9			
16	20	72	2.80	86.83	5.0			
13	16	89	1.25	68.88	5.1	**KH022-11N-63-06F** **KO022-11N-63-06F**	11	226
14	18	80	1.30	61.75	5.1			
17	21	69	1.60	53.65	5.2			
19	23	62	1.80	48.10	5.2			
20	25	56	2.00	43.50	5.2			
23	28	50	2.20	39.00	5.2			
26	32	44	2.50	34.27	5.2			
29	36	40	2.80	30.73	5.3			
37	46	31	2.65	24.05	5.3			
20	25	57	1.95	68.88	5.2	**KH022-11N-63-04E** **KO022-11N-63-04E**	10	226
22	27	51	2.00	61.75	5.2			
26	32	45	2.50	53.65	5.2			
29	35	40	2.75	48.10	5.3			
32	39	36	3.05	43.50	5.3			
35	43	33	3.40	39.00	5.3			
40	49	29	3.90	34.27	5.3			
45	55	26	2.00	30.88	5.3			
45	55	26	4.30	30.73	5.3			
52	64	22	5.00	26.41	5.3			
57	70	20	4.05	24.05	5.3			
58	72	20	5.60	23.68	5.3			
67	82	17	6.40	20.63	5.3			
71	87	16	5.00	19.50	5.3			
74	92	15	6.95	18.50	5.3			
89	110	13	7.90	15.41	5.3			
90	110	13	6.35	15.36	5.3			
100	123	12	8.45	13.81	5.3			
116	143	10	8.25	11.84	5.1			
119	146	10	9.55	11.60	5.1			
132	163	9	10.30	10.40	4.9			
149	183	8	10.55	9.25	4.7			
162	199	7	11.75	8.51	4.6			
180	222	6	12.60	7.63	4.4			
199	245	6	14.10	6.91	4.2			
264	326	4	18.70	5.20	3.9			
360	444	3	24.20	3.82	3.5			

Legend see page 181

*** ... on request*

P_N = 0.18 kW								IE1
50 Hz 0.18 kW n_{50} min^{-1}	60 Hz 0.22 kW n_{60} min^{-1}	M_2 Nm	f_B	i	at 50 Hz F_{rN} kN	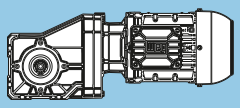	m kg	Dimension sheet see page
4.5	5.6	380	2.20	198.00	11.7	**KH063-11N-71-06E** **KO063-11N-71-06E**	35	234
5.7	7.0	301	2.75	156.92	12.0			
3.6	4.5	472	1.30	245.70	7.7	**KH053-11N-71-06E** **KO053-11N-71-06E**	22	232
4.6	5.7	374	1.65	194.73	8.5			
5.9	7.3	290	2.10	151.20	9.0			
7.2	8.9	238	2.55	124.06	9.3			
5.6	6.9	308	1.95	245.70	8.9	**KH053-11N-63-04F** **KO053-11N-63-04F**	20	232
7.0	8.7	244	2.50	194.73	9.2			
3.9	4.9	436	0.95	227.16	**	**KH043-11N-71-06E** **KO043-11N-71-06E**	19	230
5.0	6.2	345	1.20	179.37	4.9			
6.4	7.9	267	1.50	139.08	5.8			
7.9	9.7	219	1.85	113.83	6.2			
10	13	168	2.40	87.62	6.6			
12	15	140	2.90	72.92	6.7			
19	23	90	2.25	47.07	6.9			
4.9	6.1	349	1.15	277.79	4.8	**KH043-11N-63-04F** **KO043-11N-63-04F**	17	230
6.0	7.5	285	1.45	227.16	5.6			
7.6	9.5	225	1.80	179.37	6.2			
9.9	12	175	2.30	139.08	6.5			
12	15	143	2.85	113.83	6.7			
8.2	10	209	1.00	108.75	**	**KH033-11N-71-06E** **KO033-11N-71-06E**	15	228
10	13	167	1.20	86.83	4.2			
12	15	138	1.45	71.93	4.5			
14	17	126	1.60	65.63	4.6			
15	19	112	1.80	58.50	4.7			
18	22	96	2.10	49.88	4.9			
19	24	89	2.25	46.48	4.9			
23	28	75	2.70	38.80	5.0			
25	31	69	2.95	35.90	5.0			
30	37	58	2.25	29.97	5.0			
7.7	9.6	222	0.90	177.19	**	**KH033-11N-63-04F** **KO033-11N-63-04F**	13	228
9.7	12	177	1.15	140.80	4.1			
13	16	136	1.50	108.75	4.5			
16	20	109	1.85	86.83	4.8			
19	24	90	2.25	71.93	4.9			
21	26	82	2.45	65.63	4.9			
23	29	73	2.75	58.50	5.0			
13	16	132	0.85	68.88	**	**KH022-11N-71-06E** **KO022-11N-71-06E**	13	226
14	18	119	0.90	61.75	**			
17	21	103	1.10	53.65	5.0			
19	23	92	1.20	48.10	5.0			
21	25	84	1.35	43.50	5.1			
23	28	75	1.50	39.00	5.1			
26	32	66	1.70	34.27	5.2			
29	36	59	1.90	30.73	5.2			
34	42	51	2.20	26.41	5.2			
37	46	46	1.80	24.05	5.2			
38	47	45	2.45	23.68	5.2			
43	54	40	2.80	20.63	5.3			
46	57	37	2.20	19.50	5.3			
58	72	30	2.75	15.36	5.3			

Legend see page 181

*** ... on request*

K

P_N = 0.18 kW								IE1
50 Hz 0.18 kW n_{50} min^{-1}	60 Hz 0.22 kW n_{60} min^{-1}	M_2 Nm	f_B	i	at 50 Hz F_{rN} kN	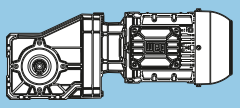	m kg	Dimension sheet see page
20	25	86	1.30	68.88	5.1	**KH022-11N-63-04F** **KO022-11N-63-04F**	11	226
22	28	77	1.35	61.75	5.1			
26	32	67	1.65	53.65	5.2			
28	35	60	1.85	48.10	5.2			
31	39	55	2.05	43.50	5.2			
35	44	49	2.25	39.00	5.2			
40	50	43	2.60	34.27	5.2			
44	55	39	1.35	30.88	5.3			
45	55	39	2.90	30.73	5.3			
52	64	33	3.35	26.41	5.3			
57	71	30	2.70	24.05	5.3			
58	72	30	3.75	23.68	5.3			
66	82	26	4.25	20.63	5.3			
70	87	24	3.35	19.50	5.3			
74	92	23	4.65	18.50	5.3			
89	110	19	5.25	15.41	5.3			
99	123	17	5.60	13.81	5.3			
116	144	15	5.50	11.84	5.1			
118	147	15	6.35	11.60	5.1			
132	163	13	6.85	10.40	4.9			
148	184	12	7.00	9.25	4.7			
161	200	11	7.80	8.51	4.6			
180	223	10	8.40	7.63	4.4			
198	246	9.0	9.35	6.91	4.3			
263	327	7.0	12.45	5.20	3.9			
359	445	5.0	16.10	3.82	3.5			

Legend see page 181

P_N = 0.25 kW								IE1
50 Hz 0.25 kW n_{50} min^{-1}	60 Hz 0.30 kW n_{60} min^{-1}	M_2 Nm	f_B	i	at 50 Hz F_{rN} kN	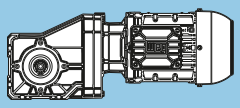	m kg	Dimension sheet see page
3.5	4.3	679	2.30	256.14	19.6	**KH073-11N-71-06F** **KO073-11N-71-06F**	57	236
4.6	5.6	525	3.00	197.75	19.9			
4.5	5.6	525	1.60	198.00	11.0	**KH063-11N-71-06F** **KO063-11N-71-06F**	37	234
5.7	7.1	416	2.00	156.92	11.6			
7.4	9.1	323	2.55	121.85	11.9			
11	14	216	2.65	81.53	12.2			
20	25	118	2.65	44.35	12.4			
6.9	8.6	345	2.40	198.00	11.9	**KH063-11N-71-04E** **KO063-11N-71-04E**	34	234
8.7	11	273	3.00	156.92	12.1			
3.7	4.5	652	0.95	245.70	**	**KH053-11N-71-06F** **KO053-11N-71-06F**	23	232
4.6	5.7	517	1.20	194.73	7.2			
6.0	7.3	401	1.50	151.20	8.3			
7.3	8.9	329	1.85	124.06	8.8			
9.4	12	255	2.40	96.08	9.2			
11	14	213	2.65	80.46	9.4			
23	29	102	2.65	38.32	9.7			
5.6	6.9	428	1.45	245.70	8.1	**KH053-11N-71-04E** **KO053-11N-71-04E**	21	232
7.0	8.7	339	1.80	194.73	8.7			
9.1	11	263	2.30	151.20	9.2			
11	14	216	2.80	124.06	9.4			
5.0	6.2	476	0.85	179.37	**	**KH043-11N-71-06F** **KO043-11N-71-06F**	20	230
6.5	8.0	369	1.10	139.08	4.4			
7.9	9.8	302	1.35	113.83	5.4			
10	13	232	1.75	87.62	6.1			
12	15	193	2.10	72.92	6.4			
14	17	176	2.30	66.20	6.5			
16	19	153	2.65	57.58	6.7			
17	20	144	2.80	54.18	6.7			
19	24	125	1.65	47.07	6.8			
23	29	102	2.65	38.49	6.9			
4.9	6.1	484	0.85	277.79	**	**KH043-11N-71-04E** **KO043-11N-71-04E**	17	230
6.0	7.5	396	1.05	227.16	3.9			
7.6	9.5	313	1.30	179.37	5.3			
9.9	12	242	1.70	139.08	6.1			
12	15	198	2.05	113.83	6.4			
15	19	155	2.45	89.17	6.6			
16	19	153	2.65	87.62	6.7			
29	36	82	2.45	47.07	6.9			
10	13	230	0.90	86.83	**	**KH033-11N-71-06F** **KO033-11N-71-06F**	16	228
13	15	191	1.05	71.93	3.9			
14	17	174	1.15	65.63	4.1			
15	19	155	1.30	58.50	4.4			
18	22	132	1.55	49.88	4.6			
19	24	123	1.65	46.48	4.7			
23	29	103	1.95	38.80	4.8			
25	31	95	2.15	35.90	4.9			
30	37	80	1.65	29.97	5.0			
31	39	76	2.65	28.67	5.0			
37	46	65	2.50	24.38	5.0			
9.7	12	245	0.85	140.80	**	**KH033-11N-71-04E** **KO033-11N-71-04E**	13	228
13	16	190	1.10	108.75	3.9			
16	20	151	1.35	86.83	4.4			
19	24	125	1.60	71.93	4.6			
21	26	114	1.75	65.63	4.7			
23	29	102	2.00	58.50	4.8			
27	34	87	2.35	49.88	4.9			
29	37	81	2.50	46.48	4.9			
35	44	68	3.00	38.80	5.0			
46	57	52	2.50	29.97	5.1			

Legend see page 181

*** ... on request*

P_N = 0.25 kW								IE1
50 Hz 0.25 kW n_{50} min^{-1}	60 Hz 0.30 kW n_{60} min^{-1}	M_2 Nm	f_B	i	at 50 Hz F_{rN} kN	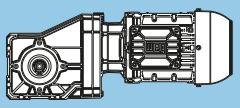	m kg	Dimension sheet see page
17	21	142	0.80	53.65	**	**KH022-11N-71-06F** **KO022-11N-71-06F**	14	226
19	23	128	0.90	48.10	**			
21	26	115	1.00	43.50	**			
23	28	103	1.10	39.00	5.0			
26	32	91	1.25	34.27	5.1			
29	36	82	1.35	30.73	5.1			
34	42	70	1.60	26.41	5.2			
37	46	64	1.30	24.05	5.2			
38	47	63	1.80	23.68	5.2			
44	54	55	2.05	20.63	5.2			
46	57	52	1.60	19.50	5.2			
49	60	49	2.20	18.50	5.2			
58	72	41	2.50	15.41	5.3			
59	72	41	2.00	15.36	5.3			
65	80	37	2.65	13.81	5.3			
76	94	31	2.60	11.84	5.3			
78	96	31	3.00	11.60	5.3			
20	25	120	0.95	68.88	**	**KH022-11N-71-04E** **KO022-11N-71-04E**	12	226
22	28	108	0.95	61.75	**			
26	32	93	1.20	53.65	5.0			
28	35	84	1.35	48.10	5.1			
31	39	76	1.50	43.50	5.1			
35	44	68	1.65	39.00	5.2			
40	50	60	1.85	34.27	5.2			
44	55	54	0.95	30.88	**			
45	55	54	2.10	30.73	5.2			
52	64	46	2.40	26.41	5.2			
57	71	42	1.95	24.05	5.3			
58	72	41	2.70	23.68	5.3			
66	82	36	3.10	20.63	5.3			
70	87	34	2.40	19.50	5.3			
74	92	32	3.35	18.50	5.3			
89	110	27	3.80	15.41	5.3			
99	123	24	4.05	13.81	5.3			
116	144	21	3.95	11.84	5.1			
118	147	20	4.60	11.60	5.1			
132	163	18	4.95	10.40	4.9			
148	184	16	5.05	9.25	4.7			
161	200	15	5.60	8.51	4.6			
180	223	13	6.05	7.63	4.4			
198	246	12	6.75	6.91	4.3			
263	327	9.0	8.95	5.20	3.9			
359	445	7.0	11.60	3.82	3.5			

K

Legend see page 181

*** ... on request*

P_N = 0.37 kW								IE1
50 Hz 0.37 kW n_{50} min^{-1}	60 Hz 0.44 kW n_{60} min^{-1}	M_2 Nm	f_B	i	at 50 Hz F_{rN} kN	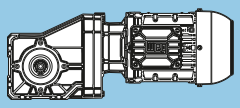	m kg	Dimension sheet see page
3.6	4.4	984	1.60	256.14	18.5	**KH073-11N-80-06E KO073-11N-80-06E**	56	236
4.7	5.7	760	2.05	197.75	19.3			
5.5	6.8	637	2.45	165.85	19.7			
5.3	6.6	663	2.35	256.14	19.6	**KH073-11N-71-04F KO073-11N-71-04F**	54	236
4.6	5.7	760	1.10	198.00	9.2	**KH063-11N-80-06E KO063-11N-80-06E**	36	234
5.9	7.2	603	1.40	156.92	10.5			
7.6	9.3	468	1.80	121.85	11.3			
9.2	11	384	2.15	99.98	11.7			
11	14	313	1.85	81.53	12.0			
12	15	297	2.80	77.42	12.0			
21	25	170	1.85	44.35	12.3			
6.9	8.5	513	1.60	198.00	11.1	**KH063-11N-71-04F KO063-11N-71-04F**	34	234
8.7	11	406	2.05	156.92	11.6			
11	14	315	2.60	121.85	12.0			
17	21	211	2.75	81.53	12.3			
31	38	115	2.75	44.35	12.4			
4.7	5.8	748	0.85	194.73	**	**KH053-11N-80-06E KO053-11N-80-06E**	23	232
6.1	7.5	581	1.05	151.20	6.4			
7.4	9.1	476	1.30	124.06	7.6			
9.6	12	369	1.65	96.08	8.5			
11	14	309	1.85	80.46	8.9			
13	15	281	2.15	73.08	9.1			
14	18	245	2.45	63.77	9.2			
15	19	231	2.60	60.26	9.3			
24	29	147	1.85	38.32	9.6			
5.6	6.9	636	0.95	245.70	**	**KH053-11N-71-04F KO053-11N-71-04F**	21	232
7.0	8.7	504	1.20	194.73	7.4			
9.0	11	391	1.55	151.20	8.4			
11	14	321	1.90	124.06	8.9			
14	18	249	2.45	96.08	9.2			
17	21	208	2.75	80.46	9.4			
36	44	99	2.75	38.32	9.7			
8.1	9.9	437	0.95	113.83	**	**KH043-11N-80-06E KO043-11N-80-06E**	20	230
10	13	337	1.20	87.62	5.0			
13	15	280	1.45	72.92	5.7			
14	17	254	1.60	66.20	5.9			
16	20	221	1.85	57.58	6.2			
17	21	208	1.95	54.18	6.3			
20	24	181	1.15	47.07	6.5			
21	26	169	2.40	43.93	6.6			
24	29	148	1.85	38.49	6.7			
25	31	140	2.90	36.54	6.7			
30	37	117	2.40	30.39	6.8			
39	48	91	2.90	23.57	6.9			
7.6	9.4	464	0.90	179.37	**	**KH043-11N-71-04F KO043-11N-71-04F**	18	230
9.8	12	360	1.15	139.08	4.6			
12	15	295	1.40	113.83	5.5			
15	19	231	1.65	89.17	6.2			
16	19	227	1.80	87.62	6.2			
19	23	189	2.15	72.92	6.5			
21	25	171	2.35	66.20	6.6			
24	29	149	2.70	57.58	6.7			
25	31	140	2.90	54.18	6.7			
29	36	122	1.65	47.07	6.8			
35	44	100	2.75	38.49	6.9			

Legend see page 181

*** ... on request*

K

P_N = 0.37 kW								IE1
50 Hz 0.37 kW n_{50} min^{-1}	60 Hz 0.44 kW n_{60} min^{-1}	M_2 Nm	f_B	i	at 50 Hz F_{rN} kN	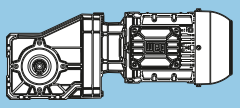	m kg	Dimension sheet see page
14	17	252	0.80	65.63	**	**KH033-11N-80-06E** **KO033-11N-80-06E**	16	228
16	19	225	0.90	58.50	**			
18	23	192	1.05	49.88	3.9			
20	24	179	1.15	46.48	4.1			
24	29	149	1.35	38.80	4.4			
26	31	138	1.50	35.90	4.5			
30	37	116	1.75	30.29	4.7			
31	38	115	1.15	29.97	4.7			
32	39	110	1.85	28.67	4.8			
38	46	94	1.75	24.38	4.9			
42	52	83	2.45	21.67	4.9			
47	58	74	2.20	19.37	5.0			
61	76	57	2.85	14.96	5.0			
16	19	225	0.90	86.83	**	**KH033-11N-71-04F** **KO033-11N-71-04F**	14	228
19	23	186	1.10	71.93	3.9			
21	26	170	1.20	65.63	4.2			
23	29	151	1.35	58.50	4.4			
27	34	129	1.55	49.88	4.6			
29	36	120	1.70	46.48	4.7			
35	43	100	2.00	38.80	4.8			
38	47	93	2.20	35.90	4.9			
46	56	78	1.70	29.97	5.0			
48	59	74	2.70	28.67	5.0			
56	69	63	2.55	24.38	5.0			
27	33	132	0.85	34.27	**	**KH022-11N-80-06E** **KO022-11N-80-06E**	14	226
30	37	118	0.95	30.73	**			
35	43	101	1.10	26.41	5.0			
38	47	92	0.90	24.05	**			
39	48	91	1.25	23.68	5.1			
45	55	79	1.40	20.63	5.1			
47	58	75	1.10	19.50	5.1			
50	61	71	1.55	18.50	5.2			
60	73	59	1.75	15.41	5.2			
67	82	53	1.85	13.81	5.2			
78	95	45	1.80	11.84	5.2			
79	97	45	2.10	11.60	5.2			
88	109	40	2.25	10.40	5.3			
99	122	36	2.30	9.25	5.3			
108	133	33	2.55	8.51	5.3			
121	148	29	2.75	7.63	5.1			
25	31	139	0.80	53.65	**	**KH022-11N-71-04F** **KO022-11N-71-04F**	12	226
28	35	125	0.90	48.10	**			
31	39	113	1.00	43.50	**			
35	43	101	1.10	39.00	5.0			
40	49	89	1.25	34.27	5.1			
44	55	80	1.40	30.73	5.1			
52	64	68	1.65	26.41	5.2			
57	70	62	1.35	24.05	5.2			
58	71	61	1.80	23.68	5.2			
66	82	53	2.10	20.63	5.2			
70	86	50	1.65	19.50	5.2			
74	91	48	2.25	18.50	5.2			
89	109	40	2.55	15.41	5.3			
99	122	36	2.75	13.81	5.3			
115	142	31	2.65	11.84	5.2			
118	145	30	3.10	11.60	5.2			
131	162	27	3.35	10.40	5.0			
148	182	24	3.40	9.25	4.8			
160	198	22	3.80	8.51	4.6			
179	221	20	4.10	7.63	4.5			
198	244	18	4.55	6.91	4.3			
263	324	13	6.05	5.20	3.9			
357	441	10	7.80	3.82	3.5			

Legend see page 181

*** ... on request*

K

P_N = 0.55 kW								IE1
50 Hz 0.55 kW n_{50} min^{-1}	60 Hz 0.66 kW n_{60} min^{-1}	M_2 Nm	f_B	i	at 50 Hz F_{rN} kN	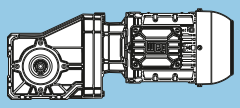	m kg	Dimension sheet see page
4.5	5.5	1164	2.60	206.12	28.2	**KH083-11N-80-06F** **KO083-11N-80-06F**	97	238
3.6	4.5	1447	1.10	256.14	16.0	**KH073-11N-80-06F** **KO073-11N-80-06F**	56	236
4.7	5.8	1117	1.40	197.75	17.9			
5.6	6.9	937	1.70	165.85	18.7			
7.1	8.8	735	2.15	130.16	19.4			
9.3	11	567	2.75	100.45	19.8			
20	24	269	2.30	47.56	20.3			
5.5	6.7	951	1.65	256.14	18.7	**KH073-11N-80-04E** **KO073-11N-80-04E**	56	236
7.2	8.7	734	2.15	197.75	19.4			
8.5	10	616	2.55	165.85	19.7			
5.9	7.3	886	0.95	156.92	**	**KH063-11N-80-06F** **KO063-11N-80-06F**	36	234
7.6	9.4	688	1.20	121.85	9.9			
9.3	11	565	1.50	99.98	10.8			
11	14	460	1.25	81.53	11.4			
12	15	437	1.90	77.42	11.5			
14	18	365	2.25	64.62	11.8			
16	19	333	2.50	58.89	11.9			
19	23	274	3.00	48.56	12.1			
21	26	250	1.25	44.35	12.2			
26	32	199	2.30	35.15	12.3			
7.1	8.7	735	1.15	198.00	9.4	**KH063-11N-80-04E** **KO063-11N-80-04E**	36	234
9.0	11	582	1.45	156.92	10.7			
12	14	452	1.85	121.85	11.4			
14	17	371	2.25	99.98	11.8			
17	21	303	1.90	81.53	12.0			
18	22	287	2.90	77.42	12.1			
32	39	165	1.90	44.35	12.3			
7.5	9.2	701	0.90	124.06	**	**KH053-11N-80-06F** **KO053-11N-80-06F**	23	232
9.7	12	543	1.15	96.08	6.9			
12	14	454	1.25	80.46	7.9			
13	16	413	1.50	73.08	8.2			
15	19	340	1.80	60.26	8.7			
19	23	280	2.15	49.52	9.1			
22	27	237	2.55	42.00	9.3			
23	28	229	2.65	40.63	9.3			
24	30	216	1.25	38.32	9.4			
31	38	172	2.30	30.37	9.5			
7.3	8.9	723	0.85	194.73	**	**KH053-11N-80-04E** **KO053-11N-80-04E**	23	232
9.4	11	561	1.10	151.20	6.7			
11	14	461	1.35	124.06	7.8			
15	18	357	1.70	96.08	8.6			
18	21	299	1.90	80.46	9.0			
19	24	271	2.25	73.08	9.1			
22	27	237	2.55	63.77	9.3			
23	29	224	2.70	60.26	9.3			
37	45	142	1.90	38.32	9.6			

Legend see page 181

*** ... on request*

K

P_N = 0.55 kW								IE1
50 Hz 0.55 kW n_{50} min^{-1}	60 Hz 0.66 kW n_{60} min^{-1}	M_2 Nm	f_B	i	at 50 Hz F_{rN} kN	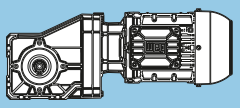	m kg	Dimension sheet see page
10	13	504	0.80	89.17	**	**KH043-11N-80-06F** **KO043-11N-80-06F**	20	230
11	13	495	0.85	87.62	**			
13	16	412	1.00	72.92	**			
14	17	374	1.10	66.20	4.4			
16	20	325	1.25	57.58	5.1			
17	21	306	1.35	54.18	5.4			
20	24	266	0.80	47.07	**			
21	26	248	1.65	43.93	6.0			
24	30	217	1.25	38.49	6.3			
25	31	208	1.95	36.78	6.3			
31	38	172	1.65	30.39	6.6			
31	38	168	2.40	29.81	6.6			
33	41	159	2.55	28.13	6.6			
39	48	133	2.00	23.57	6.8			
48	59	109	2.30	19.29	6.8			
63	77	84	2.75	14.85	6.9			
10	12	516	0.80	139.08	**	**KH043-11N-80-04E** **KO043-11N-80-04E**	19	230
12	15	423	0.95	113.83	**			
16	20	325	1.25	87.62	5.1			
19	24	271	1.50	72.92	5.8			
21	26	246	1.65	66.20	6.0			
25	30	214	1.90	57.58	6.3			
26	32	201	2.00	54.18	6.4			
30	37	175	1.15	47.07	6.5			
32	39	163	2.50	43.93	6.6			
37	45	143	1.90	38.49	6.7			
38	47	137	2.95	36.78	6.7			
39	47	136	2.95	36.54	6.7			
47	57	113	2.50	30.39	6.8			
60	73	87	3.00	23.57	6.9			
20	25	263	0.80	46.48	**	**KH033-11N-80-06F** **KO033-11N-80-06F**	16	228
24	29	219	0.95	38.80	**			
26	32	203	1.00	35.90	**			
31	38	171	1.20	30.29	4.2			
32	40	162	1.25	28.67	4.3			
38	47	138	1.20	24.38	4.5			
43	53	122	1.65	21.67	4.7			
48	59	109	1.50	19.37	4.8			
56	69	93	2.20	16.47	4.9			
62	76	84	1.95	14.96	4.9			
73	89	72	2.70	12.81	5.0			
78	95	67	2.45	11.94	5.0			
22	26	244	0.85	65.63	**	**KH033-11N-80-04E** **KO033-11N-80-04E**	16	228
24	29	217	0.95	58.50	**			
28	35	185	1.10	49.88	4.0			
30	37	173	1.20	46.48	4.1			
36	44	144	1.40	38.80	4.5			
39	48	133	1.55	35.90	4.6			
47	57	112	1.80	30.29	4.7			
49	60	106	1.90	28.67	4.8			
58	71	90	1.80	24.38	4.9			
65	80	80	2.50	21.67	4.9			
73	89	72	2.30	19.37	5.0			
95	115	56	2.95	14.96	5.1			

Legend see page 181

*** ... on request*

P_N = 0.55 kW								IE1
50 Hz 0.55 kW n_{50} min^{-1}	60 Hz 0.66 kW n_{60} min^{-1}	M_2 Nm	f_B	i	at 50 Hz F_{rN} kN	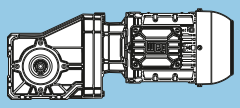	m kg	Dimension sheet see page
39	48	134	0.85	23.68	**	KH022-11N-80-06F KO022-11N-80-06F	14	226
45	55	117	0.95	20.63	**			
50	62	104	1.05	18.50	5.0			
60	74	87	1.20	15.41	5.1			
61	74	87	0.95	15.36	**			
67	83	78	1.25	13.81	5.1			
79	96	67	1.25	11.84	5.2			
80	98	66	1.45	11.60	5.2			
89	110	59	1.55	10.40	5.2			
101	123	52	1.60	9.25	5.2			
109	134	48	1.75	8.51	5.2			
122	149	43	1.90	7.63	5.2			
135	165	39	2.10	6.91	5.0			
179	219	29	2.80	5.20	4.5			
36	44	145	0.80	39.00	**	KH022-11N-80-04E KO022-11N-80-04E	14	226
41	50	127	0.90	34.27	**			
46	56	114	1.00	30.73	**			
54	65	98	1.15	26.41	5.0			
59	72	89	0.95	24.05	**			
60	73	88	1.30	23.68	5.1			
69	84	77	1.45	20.63	5.1			
73	88	72	1.15	19.50	5.1			
76	93	69	1.60	18.50	5.2			
92	112	57	1.80	15.41	5.2			
102	125	51	1.90	13.81	5.2			
120	146	44	1.85	11.84	5.2			
122	149	43	2.15	11.60	5.2			
136	166	39	2.35	10.40	5.0			
153	186	34	2.40	9.25	4.8			
166	203	32	2.65	8.51	4.6			
185	226	28	2.85	7.63	4.4			
205	250	26	3.20	6.91	4.3			
272	332	19	4.20	5.20	3.9			
370	452	14	5.45	3.82	3.5			

Legend see page 181

*** ... on request*

P_N = 0.75 kW								IE3
50 Hz 0.75 kW n_{50} min^{-1}	60 Hz 0.90 kW n_{60} min^{-1}	M_2 Nm	f_B	i	at 50 Hz F_{rN} kN	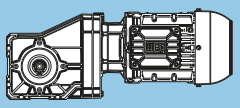	m kg	Dimension sheet see page
4.6	5.6	1571	1.95	206.12	27.1	**KH083-11P-90S/L-06E** **KO083-11P-90S/L-06E**	108	238
5.8	7.0	1243	2.45	163.14	28.0			
6.6	8.0	1085	2.80	142.45	28.3			
6.9	8.3	1040	2.90	206.12	28.4	**KH083-11P-80-04F** **KO083-11P-80-04F**	99	238
3.7	4.5	1952	0.80	256.14	**	**KH073-11P-90S/L-06E** **KO073-11P-90S/L-06E**	67	236
4.8	5.8	1507	1.05	197.75	15.5			
5.7	6.9	1264	1.25	165.85	17.1			
7.2	8.8	992	1.60	130.16	18.5			
9.4	11	765	2.05	100.45	19.3			
11	14	633	2.45	83.09	19.7			
12	15	588	2.65	77.11	19.8			
13	16	538	2.90	70.67	19.9			
20	24	362	1.70	47.56	20.2			
26	31	280	2.75	36.72	20.3			
5.5	6.7	1292	1.20	256.14	17.0	**KH073-11P-80-04F** **KO073-11P-80-04F**	58	236
7.2	8.7	997	1.60	197.75	18.5			
8.6	10	837	1.90	165.85	19.1			
11	13	657	2.40	130.16	19.6			
14	17	504	2.60	99.87	20.0			
30	36	240	2.60	47.56	20.4			
7.7	9.4	928	0.90	121.85	**	**KH063-11P-90S/L-06E** **KO063-11P-90S/L-06E**	47	234
9.4	11	762	1.10	99.98	9.2			
12	15	590	1.40	77.42	10.6			
15	18	492	1.70	64.62	11.2			
16	19	449	1.85	58.89	11.4			
19	24	370	2.25	48.56	11.8			
21	26	338	0.95	44.35	**			
23	28	314	2.65	41.17	12.0			
24	29	303	2.75	39.83	12.0			
27	33	268	1.70	35.15	12.1			
34	42	208	2.45	27.29	12.3			
42	51	171	2.95	22.40	12.3			
7.2	8.7	999	0.85	198.00	**	**KH063-11P-80-04F** **KO063-11P-80-04F**	38	234
9.0	11	792	1.05	156.92	8.9			
12	14	615	1.35	121.85	10.4			
14	17	504	1.65	99.98	11.2			
17	21	411	1.40	81.53	11.6			
18	22	391	2.10	77.42	11.7			
22	27	326	2.55	64.62	11.9			
24	29	297	2.80	58.89	12.0			
32	39	224	1.40	44.35	12.2			
40	49	177	2.60	35.15	12.3			
9.8	12	732	0.85	96.08	**	**KH053-11P-90S/L-06E** **KO053-11P-90S/L-06E**	34	232
12	14	613	0.95	80.46	**			
13	16	557	1.10	73.08	6.7			
15	18	486	1.25	63.77	7.6			
16	19	459	1.35	60.26	7.8			
19	23	377	1.60	49.43	8.5			
22	27	320	1.90	42.00	8.9			
23	28	310	1.95	40.63	8.9			
25	30	292	0.95	38.32	**			
27	33	263	2.30	34.53	9.2			
30	36	240	2.55	31.46	9.3			
31	38	231	1.70	30.37	9.3			
34	42	209	2.90	27.39	9.4			
40	49	180	2.45	23.58	9.5			
49	59	147	2.95	19.35	9.6			

Legend see page 181

*** ... on request*

K

P_N = 0.75 kW								IE3
50 Hz 0.75 kW n_{50} min^{-1}	60 Hz 0.90 kW n_{60} min^{-1}	M_2 Nm	f_B	i	at 50 Hz F_{rN} kN	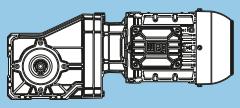	m kg	Dimension sheet see page
9.4	11	763	0.80	151.20	**	KH053-11P-80-04F KO053-11P-80-04F	25	232
11	14	626	1.00	124.06	**			
15	18	485	1.25	96.08	7.6			
18	21	406	1.40	80.46	8.3			
19	24	369	1.65	73.08	8.6			
22	27	322	1.90	63.77	8.9			
24	29	304	2.00	60.26	9.0			
29	35	250	2.45	49.52	9.2			
34	41	212	2.85	42.00	9.4			
35	42	205	2.95	40.63	9.4			
37	45	193	1.40	38.32	9.4			
47	57	153	2.60	30.37	9.5			
14	17	504	0.80	66.20	**	KH043-11P-90S/L-06E KO043-11P-90S/L-06E	30	230
16	20	439	0.95	57.58	**			
17	21	413	1.00	54.18	**			
21	26	340	1.20	44.64	4.9			
24	30	293	0.95	38.49	**			
26	31	280	1.45	36.78	5.7			
31	38	232	1.25	30.39	6.1			
32	38	227	1.80	29.81	6.2			
33	41	214	1.90	28.13	6.3			
40	49	180	1.50	23.57	6.5			
44	54	162	2.35	21.25	6.6			
49	59	147	1.70	19.29	6.7			
54	66	133	2.70	17.39	6.8			
63	77	113	2.05	14.85	6.8			
84	102	85	2.50	11.22	6.9			
102	125	70	2.90	9.18	7.0			
16	20	442	0.95	87.62	**	KH043-11P-80-04F KO043-11P-80-04F	21	230
19	24	368	1.10	72.92	4.5			
21	26	334	1.20	66.20	5.0			
25	30	290	1.40	57.58	5.6			
26	32	273	1.50	54.18	5.8			
30	37	237	0.85	47.07	**			
32	39	222	1.85	43.93	6.2			
37	45	194	1.40	38.49	6.4			
39	47	186	2.20	36.78	6.5			
47	57	153	1.85	30.39	6.7			
48	58	150	2.70	29.81	6.7			
50	61	142	2.85	28.13	6.7			
60	73	119	2.20	23.57	6.8			
74	89	97	2.55	19.29	6.9			
31	38	231	0.90	30.29	**	KH033-11P-90S/L-06E KO033-11P-90S/L-06E	26	228
33	40	218	0.95	28.67	**			
39	47	186	0.90	24.38	**			
43	53	165	1.25	21.67	4.2			
49	59	148	1.15	19.37	4.4			
57	70	125	1.60	16.47	4.6			
63	77	114	1.45	14.96	4.7			
73	89	98	2.00	12.81	4.8			
79	96	91	1.80	11.94	4.9			
94	115	76	2.35	10.00	5.0			
104	127	69	2.40	9.03	5.0			
137	167	52	2.90	6.86	5.1			

Legend see page 181

*** ... on request*

P_N = 0.75 kW								IE3
50 Hz 0.75 kW n_{50} min^{-1}	60 Hz 0.90 kW n_{60} min^{-1}	M_2 Nm	f_B	i	at 50 Hz F_{rN} kN	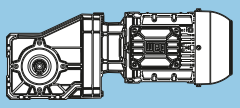	m kg	Dimension sheet see page
28	34	252	0.80	49.88	**	KH033-11P-80-04F KO033-11P-80-04F	17	228
31	37	234	0.90	46.48	**			
37	44	196	1.05	38.80	3.8			
40	48	181	1.15	35.90	4.0			
47	57	153	1.35	30.29	4.4			
50	60	145	1.40	28.67	4.5			
58	71	123	1.35	24.38	4.7			
66	79	109	1.85	21.67	4.8			
73	89	98	1.70	19.37	4.8			
86	104	83	2.45	16.47	4.9			
95	115	75	2.20	14.96	5.0			
111	134	65	3.00	12.81	5.0			
119	144	60	2.75	11.94	5.0			
51	62	141	0.80	18.50	**	KH022-11P-90S/L-06E KO022-11P-90S/L-06E	25	226
61	74	117	0.90	15.41	**			
68	83	105	0.95	13.81	**			
79	97	90	0.90	11.84	**			
81	99	88	1.05	11.60	5.1			
90	110	79	1.15	10.40	5.1			
102	124	70	1.15	9.25	5.2			
110	135	65	1.30	8.51	5.2			
123	150	58	1.40	7.63	5.2			
136	166	53	1.55	6.91	5.0			
181	220	40	2.05	5.20	4.5			
246	300	29	2.65	3.82	4.1			
54	65	133	0.85	26.41	**	KH022-11P-80-04F KO022-11P-80-04F	16	226
60	73	119	0.95	23.68	**			
69	83	104	1.10	20.63	5.0			
73	88	98	0.85	19.50	**			
77	93	93	1.15	18.50	5.0			
92	112	78	1.30	15.41	5.1			
103	125	70	1.40	13.81	5.2			
120	145	60	1.40	11.84	5.2			
122	148	59	1.60	11.60	5.2			
137	165	52	1.70	10.40	5.0			
154	186	47	1.75	9.25	4.8			
167	202	43	1.95	8.51	4.7			
186	225	38	2.10	7.63	4.5			
205	249	35	2.35	6.91	4.3			
273	331	26	3.10	5.20	3.9			
372	450	19	4.00	3.82	3.5			

Legend see page 181

*** ... on request*

P_N = 1.1 kW								IE3
50 Hz 1.1 kW n_{50} min^{-1}	60 Hz 1.3 kW n_{60} min^{-1}	M_2 Nm	f_B	i	at 50 Hz F_{rN} kN	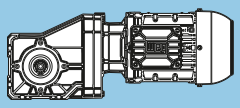	m kg	Dimension sheet see page
5.6	6.8	1881	2.40	169.25	38.1	**KH093-11P-100L-06D** **KO093-11P-100L-06D**	166	240
6.6	8.0	1591	2.85	143.08	38.6			
7.1	8.5	1488	2.05	206.12	27.3	**KH083-11P-90S/L-04E** **KO083-11P-90S/L-04E**	105	238
8.9	11	1178	2.55	163.14	28.1			
10	12	1028	2.95	142.45	28.4			
4.6	5.6	2291	1.35	206.12	24.1	**KH083-11P-100L-06D** **KO083-11P-100L-06D**	116	238
5.8	7.0	1814	1.70	163.14	26.2			
6.6	8.1	1584	1.90	142.45	27.0			
7.5	9.1	1400	2.15	125.90	27.6			
8.9	11	1183	2.55	106.46	28.1			
10	13	1017	2.95	91.51	28.5			
5.7	6.9	1849	0.85	256.14	**	**KH073-11P-90S/L-04E** **KO073-11P-90S/L-04E**	64	236
7.4	8.9	1428	1.10	197.75	16.1			
8.8	11	1197	1.30	165.85	17.5			
11	14	940	1.65	130.16	18.7			
14	18	725	2.15	100.45	19.4			
15	18	721	1.80	99.87	19.4			
18	21	600	2.60	83.09	19.8			
19	23	557	2.80	77.11	19.9			
31	37	343	1.80	47.56	20.2			
40	48	265	2.90	36.72	20.3			
5.7	6.9	1844	0.85	165.85	**	**KH073-11P-100L-06D** **KO073-11P-100L-06D**	75	236
7.3	8.8	1447	1.10	130.16	15.9			
9.4	11	1117	1.40	100.45	17.9			
9.5	12	1110	1.20	99.87	17.9			
11	14	924	1.70	83.09	18.8			
12	15	857	1.85	77.11	19.0			
13	16	786	2.00	70.67	19.2			
15	19	681	2.30	61.25	19.6			
18	22	575	2.70	51.72	19.8			
19	23	564	2.75	50.75	19.8			
20	24	529	1.20	47.56	19.9			
26	31	408	1.90	36.72	20.1			
31	37	342	2.70	30.79	20.2			
12	14	880	0.95	121.85	**	**KH063-11P-90S/L-04E** **KO063-11P-90S/L-04E**	44	234
15	18	722	1.15	99.98	9.6			
18	22	589	1.00	81.53	**			
19	23	559	1.50	77.42	10.8			
23	27	467	1.80	64.62	11.4			
25	30	425	1.95	58.89	11.5			
29	35	362	2.30	50.17	11.8			
30	36	351	2.35	48.56	11.9			
33	40	320	1.00	44.35	**			
35	43	297	2.80	41.17	12.0			
37	44	288	2.90	39.83	12.1			
41	50	254	1.80	35.15	12.2			
53	64	197	2.55	27.29	12.3			
12	15	861	1.00	77.42	**	**KH063-11P-100L-06D** **KO063-11P-100L-06D**	55	234
15	18	718	1.15	64.62	9.6			
16	20	655	1.30	58.89	10.1			
19	24	540	1.55	48.56	10.9			
23	28	458	1.80	41.17	11.4			
24	29	443	1.90	39.83	11.5			
27	33	391	1.20	35.15	11.7			
28	34	376	2.20	33.85	11.8			
30	36	354	2.35	31.88	11.8			
34	41	309	2.55	27.83	12.0			
35	42	303	1.65	27.29	12.0			
42	51	249	2.05	22.40	12.2			
43	52	245	3.00	22.07	12.2			
54	66	193	2.60	17.34	12.3			

Legend see page 181

*** ... on request*

K

P_N = 1.1 kW								IE3
50 Hz 1.1 kW n_{50} min^{-1}	60 Hz 1.3 kW n_{60} min^{-1}	M_2 Nm	f_B	i	at 50 Hz F_{rN} kN	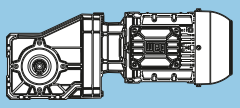	m kg	Dimension sheet see page
15	18	694	0.90	96.08	**	KH053-11P-90S/L-04E KO053-11P-90S/L-04E	31	232
18	22	581	1.00	80.46	**			
20	24	528	1.15	73.08	7.1			
23	28	460	1.35	63.77	7.8			
24	29	435	1.40	60.26	8.0			
29	36	358	1.70	49.52	8.6			
35	42	303	2.00	42.00	9.0			
36	43	293	2.05	40.63	9.0			
38	46	277	1.00	38.32	**			
42	51	249	2.45	34.53	9.2			
46	56	227	2.65	31.46	9.3			
48	58	219	1.80	30.37	9.3			
62	75	170	2.55	23.58	9.5			
15	18	709	0.85	63.77	**	KH053-11P-100L-06D KO053-11P-100L-06D	42	232
16	19	670	0.90	60.26	**			
19	23	550	1.10	49.52	6.8			
23	28	452	1.35	40.63	7.9			
27	33	384	1.60	34.53	8.4			
30	37	350	1.75	31.46	8.7			
31	38	338	1.20	30.37	8.8			
35	42	304	2.00	27.39	8.9			
39	48	266	2.30	23.93	9.1			
40	49	262	1.65	23.58	9.2			
48	58	219	2.75	19.73	9.3			
49	59	215	2.05	19.35	9.4			
63	77	167	2.60	14.98	9.5			
20	24	526	0.80	72.92	**	KH043-11P-90S/L-04E KO043-11P-90S/L-04E	28	230
22	27	478	0.85	66.20	**			
25	31	416	1.00	57.58	**			
27	32	391	1.05	54.18	4.0			
33	40	317	1.30	43.93	5.2			
38	46	278	1.00	38.49	**			
40	48	266	1.55	36.78	5.8			
48	58	219	1.30	30.39	6.2			
49	59	215	1.90	29.81	6.3			
52	63	203	2.00	28.13	6.4			
62	75	170	1.55	23.57	6.6			
68	83	153	2.45	21.25	6.7			
75	91	139	1.80	19.29	6.7			
84	101	126	2.85	17.39	6.8			
98	119	107	2.15	14.85	6.9			
130	157	81	2.65	11.22	6.9			

Legend see page 181

*** ... on request*

P_N = 1.1 kW								IE3
50 Hz 1.1 kW n_{50} min^{-1}	60 Hz 1.3 kW n_{60} min^{-1}	M_2 Nm	f_B	i	at 50 Hz F_{rN} kN	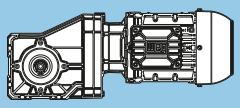	m kg	Dimension sheet see page
21	26	496	0.85	44.64	**	**KH043-11P-100L-06D KO043-11P-100L-06D**	38	230
22	26	488	0.85	43.93	**			
26	31	409	1.00	36.78	**			
31	38	338	0.85	30.39	**			
32	39	331	1.25	29.81	5.0			
34	41	313	1.30	28.13	5.3			
40	49	262	1.00	23.57	**			
44	54	236	1.60	21.25	6.1			
49	60	214	1.20	19.29	6.3			
54	66	193	1.85	17.39	6.4			
64	77	165	1.40	14.85	6.6			
67	82	157	2.15	14.10	6.6			
80	97	131	2.40	11.81	6.8			
84	102	125	1.75	11.22	6.8			
99	120	106	2.80	9.57	6.9			
103	125	102	2.00	9.18	6.9			
127	155	83	2.30	7.44	6.9			
152	185	69	2.65	6.23	7.0			
41	49	259	0.80	35.90	**	**KH033-11P-90S/L-04E KO033-11P-90S/L-04E**	24	228
48	58	219	0.95	30.29	**			
51	61	207	1.00	28.67	**			
60	72	176	0.95	24.38	**			
67	81	156	1.30	21.67	4.3			
75	91	140	1.20	19.37	4.5			
88	107	119	1.70	16.47	4.7			
97	118	108	1.55	14.96	4.8			
114	137	92	2.10	12.81	4.9			
122	147	86	1.90	11.94	4.9			
146	176	72	2.50	10.00	5.0			
161	195	65	2.55	9.03	5.0			
44	53	241	0.85	21.67	**	**KH033-11P-100L-06D KO033-11P-100L-06D**	35	228
49	59	215	0.80	19.37	**			
57	70	183	1.10	16.47	4.0			
63	77	166	1.00	14.96	**			
74	90	142	1.35	12.81	4.5			
79	96	133	1.25	11.94	4.6			
95	115	111	1.65	10.00	4.8			
105	127	100	1.65	9.03	4.8			
138	168	76	2.00	6.86	5.0			
177	215	59	2.35	5.34	5.0			
227	276	46	2.75	4.17	5.1			
79	95	134	0.85	18.50	**	**KH022-11P-90S/L-04E KO022-11P-90S/L-04E**	22	226
94	114	111	0.95	15.41	**			
105	127	100	1.00	13.81	**			
123	149	85	0.95	11.84	**			
125	152	84	1.10	11.60	5.1			
140	169	75	1.20	10.40	5.1			
157	190	67	1.25	9.25	4.9			
171	207	61	1.40	8.51	4.7			
191	231	55	1.50	7.63	4.5			
211	255	50	1.65	6.91	4.4			
280	338	38	2.20	5.20	3.9			
381	461	28	2.80	3.82	3.5			

Legend see page 181

*** ... on request*

P_N = 1.5 kW								IE3
50 Hz 1.5 kW n_{50} min^{-1}	60 Hz 1.8 kW n_{60} min^{-1}	M_2 Nm	f_B	i	at 50 Hz F_{rN} kN	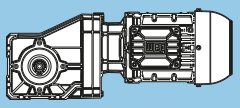	m kg	Dimension sheet see page
8.6	10	1672	2.70	169.25	38.5	**KH093-11P-90S/L-04F** **KO093-11P-90S/L-04F**	159	240
7.0	8.5	2036	1.50	206.12	25.3	**KH083-11P-90S/L-04F** **KO083-11P-90S/L-04F**	109	238
8.9	11	1612	1.90	163.14	26.9			
10	12	1407	2.15	142.45	27.5			
12	14	1244	2.45	125.90	28.0			
14	16	1052	2.90	106.46	28.4			
7.3	8.9	1954	0.80	197.75	**	**KH073-11P-90S/L-04F** **KO073-11P-90S/L-04F**	68	236
8.7	11	1638	0.95	165.85	**			
11	13	1286	1.25	130.16	17.0			
14	17	992	1.60	100.45	18.5			
15	18	987	1.35	99.87	18.5			
17	21	821	1.90	83.09	19.1			
19	23	762	2.05	77.11	19.3			
21	25	698	2.25	70.67	19.5			
22	27	639	2.45	64.67	19.7			
24	29	605	2.60	61.25	19.8			
30	37	470	1.35	47.56	20.0			
39	48	363	2.10	36.72	20.2			
47	57	304	3.00	30.79	20.3			
15	18	988	0.85	99.98	**	**KH063-11P-90S/L-04F** **KO063-11P-90S/L-04F**	48	234
19	23	765	1.10	77.42	9.1			
22	27	638	1.30	64.62	10.3			
25	30	582	1.45	58.89	10.7			
29	35	496	1.70	50.17	11.2			
30	36	480	1.75	48.56	11.3			
35	43	407	2.05	41.17	11.6			
36	44	393	2.10	39.83	11.7			
41	50	347	1.35	35.15	11.9			
43	52	334	2.50	33.85	11.9			
45	55	315	2.65	31.88	12.0			
52	63	275	2.85	27.83	12.1			
53	64	270	1.90	27.29	12.1			
65	78	221	2.30	22.40	12.2			
84	101	171	2.95	17.34	12.3			
20	24	722	0.85	73.08	**	**KH053-11P-90S/L-04F** **KO053-11P-90S/L-04F**	35	232
23	28	630	1.00	63.77	**			
24	29	595	1.05	60.26	6.2			
29	35	489	1.25	49.52	7.5			
35	42	415	1.45	42.00	8.2			
36	43	401	1.50	40.63	8.3			
42	51	341	1.80	34.53	8.7			
46	56	311	1.95	31.46	8.9			
48	58	300	1.35	30.37	9.0			
53	64	271	2.25	27.39	9.1			
61	73	236	2.55	23.93	9.3			
75	91	191	2.30	19.35	9.4			
97	117	148	2.95	14.98	9.6			

Legend see page 181

*** ... on request*

P_N = 1.5 kW								IE3
50 Hz 1.5 kW n_{50} min^{-1}	60 Hz 1.8 kW n_{60} min^{-1}	M_2 Nm	f_B	i	at 50 Hz F_{rN} kN	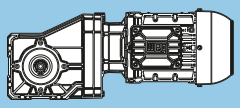	m kg	Dimension sheet see page
32	39	441	0.95	44.64	**	**KH043-11P-90S/L-04F** **KO043-11P-90S/L-04F**	31	230
33	40	434	0.95	43.93	**			
39	48	363	1.15	36.78	4.5			
40	48	361	1.15	36.54	4.6			
48	58	300	0.95	30.39	**			
49	59	295	1.40	29.81	5.5			
52	62	278	1.45	28.13	5.7			
62	74	233	1.15	23.57	6.1			
68	83	210	1.80	21.25	6.3			
75	91	191	1.30	19.29	6.4			
83	101	172	2.10	17.39	6.6			
98	118	147	1.60	14.85	6.7			
103	124	139	2.40	14.10	6.7			
123	149	117	2.70	11.81	6.8			
129	156	111	1.95	11.22	6.8			
158	191	91	2.25	9.18	6.9			
195	236	74	2.60	7.44	6.9			
233	282	62	2.95	6.23	7.0			
67	81	214	0.95	21.67	**	**KH033-11P-90S/L-04F** **KO033-11P-90S/L-04F**	27	228
75	91	191	0.90	19.37	**			
88	107	163	1.25	16.47	4.3			
97	117	148	1.15	14.96	4.4			
113	137	127	1.55	12.81	4.6			
121	147	118	1.40	11.94	4.7			
145	176	99	1.85	10.00	4.8			
161	194	89	1.85	9.03	4.9			
211	256	68	2.20	6.86	5.0			
272	329	53	2.60	5.34	5.0			
125	151	115	0.85	11.60	**	**KH022-11P-90S/L-04F** **KO022-11P-90S/L-04F**	26	226
139	169	103	0.90	10.40	**			
157	190	91	0.90	9.25	**			
170	206	84	1.00	8.51	**			
190	230	75	1.10	7.63	4.6			
210	254	68	1.20	6.91	4.4			
279	338	51	1.60	5.20	4.0			
380	459	38	2.05	3.82	3.6			

Legend see page 181

*** ... on request*

P_N = 2.2 kW								IE3
50 Hz 2.2 kW n_{50} min^{-1}	60 Hz 2.6 kW n_{60} min^{-1}	M_2 Nm	f_B	i	at 50 Hz F_{rN} kN	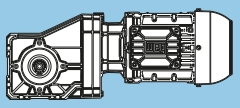	m kg	Dimension sheet see page
8.5	10	2478	1.85	169.25	36.7	**KH093-11P-100L-04E** **KO093-11P-100L-04E**	169	240
10	12	2095	2.15	143.08	37.7			
12	14	1813	2.50	123.86	38.2			
13	16	1606	2.85	109.70	38.6			
7.0	8.5	3018	1.00	206.12	**	**KH083-11P-100L-04E** **KO083-11P-100L-04E**	119	238
8.8	11	2389	1.30	163.14	23.6			
10	12	2086	1.45	142.45	25.1			
11	14	1843	1.65	125.90	26.1			
13	16	1559	1.95	106.46	27.1			
16	19	1340	2.25	91.51	27.7			
18	22	1170	2.60	79.89	28.1			
21	25	1002	3.00	68.44	28.5			
32	38	666	2.45	45.48	29.0			
11	13	1906	0.85	130.16	**	**KH073-11P-100L-04E** **KO073-11P-100L-04E**	78	236
14	17	1471	1.10	100.45	15.8			
17	21	1217	1.30	83.09	17.4			
20	25	1035	1.50	70.67	18.3			
22	27	947	1.65	64.67	18.7			
23	28	897	1.75	61.25	18.9			
28	34	743	2.10	50.75	19.4			
29	35	730	2.15	49.88	19.4			
34	41	624	2.50	42.61	19.7			
37	45	573	2.75	39.17	19.8			
47	57	451	2.05	30.79	20.1			
59	72	354	2.60	24.17	20.2			
24	30	862	1.00	58.89	**	**KH063-11P-100L-04E** **KO063-11P-100L-04E**	58	234
30	36	711	1.20	48.56	9.7			
35	42	603	1.40	41.17	10.5			
36	44	583	1.45	39.83	10.7			
42	52	496	1.70	33.85	11.2			
45	55	467	1.80	31.88	11.4			
52	63	407	1.95	27.83	11.6			
53	65	393	2.00	26.84	11.7			
59	72	355	2.35	24.25	11.8			
64	78	328	1.55	22.40	11.9			
65	79	323	2.30	22.07	11.9			
72	87	293	2.75	20.00	12.0			
83	101	254	2.00	17.34	12.2			
109	132	193	2.60	13.19	12.3			
29	35	724	0.85	49.43	**	**KH053-11P-100L-04E** **KO053-11P-100L-04E**	45	232
34	42	615	1.00	42.00	**			
35	43	595	1.05	40.63	6.2			
42	51	506	1.20	34.53	7.3			
43	52	488	1.25	33.30	7.5			
46	55	461	1.35	31.46	7.8			
52	64	401	1.50	27.39	8.3			
60	73	350	1.75	23.93	8.7			
73	88	289	2.10	19.73	9.0			
74	90	283	1.55	19.35	9.1			
89	108	237	2.55	16.19	9.3			
96	116	219	2.00	14.98	9.3			
104	127	201	3.00	13.75	9.4			
126	153	167	2.60	11.40	9.5			

Legend see page 181

*** ... on request*

P_N = 2.2 kW								IE3
50 Hz 2.2 kW n_{50} min^{-1}	60 Hz 2.6 kW n_{60} min^{-1}	M_2 Nm	f_B	i	at 50 Hz F_{rN} kN	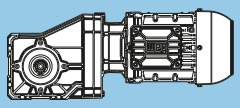	m kg	Dimension sheet see page
48	59	436	0.95	29.81	**	KH043-11P-100L-04E KO043-11P-100L-04E	41	230
50	61	421	1.00	28.74	**			
51	62	412	1.00	28.13	**			
68	82	311	1.25	21.25	5.3			
74	90	282	0.90	19.29	**			
83	100	255	1.40	17.39	5.9			
97	118	217	1.10	14.85	6.3			
102	124	206	1.65	14.10	6.3			
122	148	173	1.85	11.81	6.6			
128	156	164	1.30	11.22	6.6			
150	182	140	2.15	9.57	6.7			
155	189	135	2.20	9.23	6.7			
156	190	134	1.55	9.18	6.7			
193	235	109	1.75	7.44	6.8			
230	280	91	2.00	6.23	6.9			
284	346	74	2.35	5.05	6.9			
295	358	71	2.40	4.87	6.8			
87	106	241	0.85	16.47	**	KH033-11P-100L-04E KO033-11P-100L-04E	38	228
112	136	188	1.05	12.81	3.9			
120	146	175	0.95	11.94	**			
144	175	146	1.25	10.00	4.4			
159	193	132	1.25	9.03	4.6			
209	254	100	1.50	6.86	4.8			
269	327	78	1.80	5.34	5.0			
344	418	61	2.10	4.17	4.7			

K

Legend see page 181

*** ... on request*

P_N = 3.0 kW								IE3
50 Hz 3.0 kW n_{50} min^{-1}	60 Hz 3.6 kW n_{60} min^{-1}	M_2 Nm	f_B	i	at 50 Hz F_{rN} kN	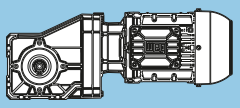	m kg	Dimension sheet see page
8.5	10	3367	1.35	169.25	33.7	**KH093-11P-L100L-04F** **KO093-11P-L100L-04F**	178	240
10	12	2847	1.60	143.08	35.6			
12	14	2464	1.85	123.86	36.7			
13	16	2183	2.10	109.70	37.5			
15	18	1888	2.40	94.90	38.1			
16	19	1821	2.50	91.51	38.2			
18	22	1606	2.85	80.74	38.6			
8.8	11	3246	0.95	163.14	**	**KH083-11P-L100L-04F** **KO083-11P-L100L-04F**	128	238
10	12	2834	1.10	142.45	20.7			
11	14	2505	1.20	125.90	22.9			
14	16	2118	1.45	106.46	24.9			
16	19	1821	1.65	91.51	26.2			
18	22	1589	1.90	79.89	27.0			
21	25	1362	2.25	68.44	27.7			
22	26	1313	2.30	66.00	27.8			
23	28	1256	2.30	63.12	27.9			
25	30	1159	2.60	58.25	28.2			
26	32	1096	2.75	55.11	28.3			
32	38	905	1.80	45.48	28.7			
40	48	716	2.30	35.99	29.0			
14	17	1999	0.80	100.45	**	**KH073-11P-L100L-04F** **KO073-11P-L100L-04F**	87	236
17	21	1653	0.95	83.09	**			
20	25	1406	1.15	70.67	16.2			
22	27	1287	1.25	64.67	17.0			
24	28	1219	1.30	61.25	17.4			
28	34	1010	1.55	50.75	18.4			
29	35	992	1.60	49.88	18.5			
34	41	848	1.85	42.61	19.0			
37	44	779	2.00	39.17	19.3			
44	54	645	2.45	32.40	19.7			
47	57	613	1.50	30.79	19.7			
52	63	548	2.85	27.56	19.9			
60	72	481	1.90	24.17	20.0			
77	93	371	2.50	18.65	20.2			
93	113	307	3.00	15.43	20.3			
30	36	966	0.85	48.56	**	**KH063-11P-L100L-04F** **KO063-11P-L100L-04F**	67	234
35	42	819	1.05	41.17	8.6			
36	44	792	1.05	39.83	8.9			
43	51	673	1.25	33.85	10.0			
45	55	634	1.30	31.88	10.3			
52	63	554	1.45	27.83	10.9			
54	65	534	1.45	26.84	11.0			
59	72	482	1.70	24.25	11.3			
64	78	446	1.15	22.40	11.5			
65	79	439	1.70	22.07	11.5			
72	87	398	2.05	20.00	11.7			
83	100	345	1.45	17.34	11.9			
88	106	326	2.35	16.40	11.9			
103	125	277	2.65	13.94	12.1			
109	132	262	1.95	13.19	12.1			
126	152	228	3.00	11.46	12.2			
132	160	216	2.35	10.88	12.2			
161	195	177	2.85	8.92	12.3			

Legend see page 181

*** ... on request*

P_N = 3.0 kW								IE3
50 Hz 3.0 kW n_{50} min^{-1}	60 Hz 3.6 kW n_{60} min^{-1}	M_2 Nm	f_B	i	at 50 Hz F_{rN} kN	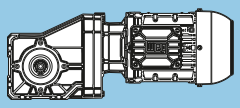	m kg	Dimension sheet see page
42	50	687	0.90	34.53	**	KH053-11P-L100L-04F KO053-11P-L100L-04F	53	232
43	52	663	0.95	33.30	**			
46	55	626	1.00	31.46	**			
53	64	545	1.15	27.39	6.9			
60	73	476	1.30	23.93	7.7			
73	88	393	1.55	19.73	8.4			
74	90	385	1.15	19.35	8.4			
89	107	322	1.90	16.19	8.8			
96	116	298	1.45	14.98	9.0			
105	127	274	2.20	13.75	9.1			
126	153	227	1.95	11.40	9.3			
127	154	225	2.60	11.31	9.3			
132	159	217	2.65	10.91	9.3			
153	185	187	2.35	9.40	9.5			
187	226	153	2.85	7.71	9.5			
68	82	423	0.90	21.25	**	KH043-11P-L100L-04F KO043-11P-L100L-04F	50	230
83	100	346	1.05	17.39	4.8			
97	117	295	0.80	14.85	**			
102	123	281	1.20	14.10	5.7			
122	147	235	1.35	11.81	6.1			
128	155	223	1.00	11.22	**			
150	182	190	1.55	9.57	6.4			
156	189	184	1.60	9.23	6.5			
157	190	183	1.15	9.18	6.5			
194	234	148	1.30	7.44	6.7			
231	279	124	1.50	6.23	6.8			
285	345	100	1.75	5.05	6.9			
296	357	97	1.75	4.87	6.9			
112	136	255	0.80	12.81	**	KH033-11P-L100L-04F KO033-11P-L100L-04F	46	228
144	174	199	0.90	10.00	**			
159	193	180	0.95	9.03	**			
210	254	136	1.10	6.86	4.5			
270	326	106	1.30	5.34	4.8			
345	417	83	1.55	4.17	4.9			

K

Legend see page 181

*** ... on request*

P_N = 4.0 kW								IE3
50 Hz 4.0 kW n_{50} min^{-1}	60 Hz 4.8 kW n_{60} min^{-1}	M_2 Nm	f_B	i	at 50 Hz F_{rN} kN	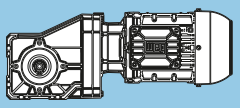	m kg	Dimension sheet see page
8.6	10	4459	1.05	169.25	28.2	**KH093-11P-112M-04E** **KO093-11P-112M-04E**	178	240
10	12	3769	1.20	143.08	32.0			
12	14	3263	1.40	123.86	34.2			
13	16	2890	1.60	109.70	35.5			
15	18	2500	1.80	94.90	36.6			
16	19	2411	1.90	91.51	36.9			
18	22	2127	2.15	80.74	37.6			
21	26	1810	2.50	68.71	38.2			
23	27	1685	2.70	63.96	38.5			
24	30	1562	2.90	59.28	38.7			
39	47	978	2.85	37.13	39.4			
10	12	3753	0.80	142.45	**	**KH083-11P-112M-04E** **KO083-11P-112M-04E**	128	238
12	14	3317	0.95	125.90	**			
14	16	2805	1.10	106.46	20.9			
16	19	2411	1.25	91.51	23.4			
18	22	2105	1.45	79.89	25.0			
21	26	1803	1.70	68.44	26.3			
22	27	1739	1.75	66.00	26.5			
23	28	1663	1.75	63.12	26.8			
25	30	1535	2.00	58.25	27.2			
26	32	1452	2.10	55.11	27.4			
30	36	1287	2.35	48.87	27.9			
32	39	1198	1.40	45.48	28.1			
35	43	1085	2.80	41.19	28.3			
40	49	948	1.75	35.99	28.6			
46	56	828	2.35	31.43	28.8			
52	63	732	2.60	27.78	28.9			
21	25	1862	0.85	70.67	**	**KH073-11P-112M-04E** **KO073-11P-112M-04E**	87	236
22	27	1704	0.95	64.67	**			
24	29	1614	1.00	61.25	**			
28	34	1363	1.15	51.72	16.5			
29	35	1337	1.20	50.75	16.7			
34	41	1123	1.40	42.61	17.9			
37	45	1032	1.55	39.17	18.3			
45	54	854	1.85	32.40	19.0			
47	57	811	1.15	30.79	19.2			
53	64	726	2.15	27.56	19.4			
60	73	637	1.45	24.17	19.7			
61	73	629	2.50	23.88	19.7			
72	87	531	2.95	20.17	19.9			
78	94	491	1.90	18.65	20.0			
94	114	407	2.25	15.43	20.2			
111	134	346	2.65	13.12	20.2			

Legend see page 181

*** ... on request*

P_N = 4.0 kW								IE3
50 Hz 4.0 kW n_{50} min^{-1}	60 Hz 4.8 kW n_{60} min^{-1}	M_2 Nm	f_B	i	at 50 Hz F_{rN} kN	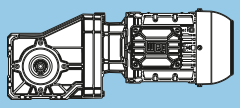	m kg	Dimension sheet see page
35	43	1085	0.80	41.17	**	KH063-11P-112M-04E KO063-11P-112M-04E	67	234
36	44	1049	0.80	39.83	**			
43	52	892	0.95	33.85	**			
45	55	840	1.00	31.88	**			
52	63	733	1.10	27.83	9.5			
54	65	707	1.10	26.84	9.7			
60	72	639	1.30	24.25	10.3			
65	78	590	0.85	22.40	**			
66	80	581	1.30	22.07	10.7			
73	88	527	1.55	20.00	11.0			
84	101	457	1.10	17.34	11.4			
88	107	432	1.80	16.40	11.5			
104	126	367	2.00	13.94	11.8			
110	133	347	1.45	13.19	11.9			
127	153	302	2.30	11.46	12.0			
131	159	291	2.35	11.05	12.0			
133	161	287	1.75	10.88	12.1			
160	193	239	2.70	9.09	12.2			
163	197	235	2.15	8.92	12.2			
191	232	200	2.55	7.58	12.3			
53	64	722	0.85	27.39	**	KH053-11P-112M-04E KO053-11P-112M-04E	54	232
61	73	630	1.00	23.93	**			
73	89	520	1.20	19.73	7.2			
75	91	510	0.85	19.35	**			
90	108	427	1.45	16.19	8.1			
97	117	395	1.10	14.98	8.4			
105	128	362	1.70	13.75	8.6			
127	154	300	1.45	11.40	9.0			
128	155	298	1.95	11.31	9.0			
133	161	287	2.00	10.91	9.0			
154	187	248	1.75	9.40	9.2			
162	196	236	2.30	8.97	9.3			
188	228	203	2.15	7.71	9.4			
221	268	173	2.55	6.55	9.5			
269	326	142	2.90	5.39	9.2			
279	338	137	2.95	5.19	9.0			
83	101	458	0.80	17.39	**	KH043-11P-112M-04E KO043-11P-112M-04E	50	230
103	124	371	0.90	14.10	**			
123	149	311	1.05	11.81	5.3			
152	183	252	1.20	9.57	6.0			
157	190	243	1.25	9.23	6.0			
158	191	242	0.85	9.18	**			
195	236	196	1.00	7.44	**			
233	282	164	1.15	6.23	6.6			
287	348	133	1.30	5.05	6.8			
298	360	128	1,35	4,87	6,8			

Legend see page 181

*** ... on request*

P_N = 5.5 kW								IE3
50 Hz 5.5 kW n_{50} min^{-1}	60 Hz 6.6 kW n_{60} min^{-1}	M_2 Nm	f_B	i	at 50 Hz F_{rN} kN	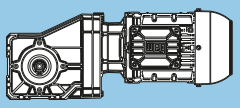	m kg	Dimension sheet see page
10	12	5130	0.90	143.08	**	**KH093-11P-132S-04E** **KO093-11P-132S-04E**	198	240
12	14	4441	1.05	123.86	28.3			
13	16	3933	1.15	109.70	31.2			
15	19	3402	1.35	94.90	33.6			
16	19	3281	1.40	91.51	34.1			
18	22	2895	1.60	80.74	35.5			
21	26	2463	1.85	68.71	36.7			
23	28	2293	2.00	63.96	37.2			
25	30	2125	2.15	59.28	37.6			
27	33	1939	2.35	54.07	38.0			
31	38	1678	2.70	46.81	38.5			
39	48	1331	2.10	37.13	39.0			
47	56	1125	2.50	31.39	39.3			
54	65	974	2.90	27.18	39.4			
14	17	3817	0.80	106.46	**	**KH083-11P-132S-04E** **KO083-11P-132S-04E**	148	238
16	19	3281	0.95	91.51	**			
18	22	2864	1.05	79.89	20.5			
21	26	2454	1.25	68.44	23.2			
22	27	2366	1.30	66.00	23.7			
23	28	2263	1.30	63.12	24.2			
25	30	2088	1.45	58.25	25.1			
27	32	1976	1.55	55.11	25.6			
30	36	1752	1.75	48.87	26.4			
32	39	1631	1.00	45.48	**			
36	43	1477	2.05	41.19	27.3			
41	50	1270	2.40	35.41	27.9			
47	57	1108	2.75	30.91	28.3			
53	64	996	1.95	27.78	28.5			
62	75	842	2.30	23.49	28.8			
73	87	724	2.65	20.19	29.0			
28	34	1854	0.85	51.72	**	**KH073-11P-132S-04E** **KO073-11P-132S-04E**	107	236
29	35	1820	0.90	50.75	**			
34	41	1528	1.05	42.61	15.3			
37	45	1404	1.15	39.17	16.2			
45	54	1162	1.35	32.40	17.7			
48	57	1104	0.85	30.79	**			
53	64	988	1.60	27.56	18.5			
61	74	856	1.85	23.88	19.0			
73	88	723	2.15	20.17	19.4			
75	91	697	2.25	19.45	19.5			
79	95	669	1.40	18.65	19.6			
88	106	596	2.65	16.61	19.8			
95	114	553	1.65	15.43	19.9			
112	135	470	1.95	13.12	20.0			
129	155	408	2.25	11.37	20.1			
153	184	344	2.65	9.60	20.2			
158	191	332	2.75	9.26	20.3			

Legend see page 181

*** ... on request*

P_N = 5.5 kW								IE3
50 Hz 5.5 kW n_{50} min^{-1}	60 Hz 6.6 kW n_{60} min^{-1}	M_2 Nm	f_B	i	at 50 Hz F_{rN} kN	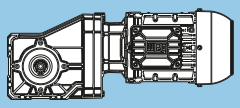	m kg	Dimension sheet see page
53	63	998	0.80	27.83	**	**KH063-11P-132S-04E** **KO063-11P-132S-04E**	87	234
55	66	962	0.85	26.84	**			
60	73	869	0.95	24.25	**			
66	80	791	0.95	22.07	**			
73	88	717	1.15	20.00	9.6			
84	102	622	0.85	17.34	**			
89	108	588	1.30	16.40	10.6			
105	127	500	1.45	13.94	11.2			
111	134	473	1.10	13.19	11.3			
128	154	411	1.70	11.46	11.6			
133	160	396	1.70	11.05	11.7			
135	162	390	1.30	10.88	11.7			
161	194	326	1.95	9.09	11.9			
164	198	320	1.60	8.92	12.0			
193	233	272	1.85	7.58	12.1			
235	283	223	2.25	6.23	12.2			
244	294	215	2.30	6.01	12.2			
297	357	177	2.65	4.94	12.3			
74	89	707	0.85	19.73	**	**KH053-11P-132S-04E** **KO053-11P-132S-04E**	74	232
90	109	580	1.05	16.19	6.4			
98	118	537	0.85	14.98	**			
107	128	493	1.25	13.75	7.5			
129	155	409	1.10	11.40	8.3			
130	156	406	1.45	11.31	8.3			
134	162	391	1.50	10.91	8.4			
156	188	337	1.30	9.40	8.8			
163	197	322	1.70	8.97	8.9			
190	229	276	1.60	7.71	9.1			
224	269	235	1.85	6.55	9.3			
272	327	193	2.15	5.39	9.4			
282	340	186	2.20	5.19	9.4			
343	413	153	2.50	4.27	8.6			

Legend see page 181

*** ... on request*

P_N = 7.5 kW								IE3
50 Hz 7.5 kW n_{50} min^{-1}	60 Hz 9.0 kW n_{60} min^{-1}	M_2 Nm	f_B	i	at 50 Hz F_{rN} kN	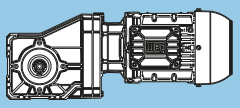	m kg	Dimension sheet see page
13	16	5363	0.85	109.70	**	**KH093-11P-L132M-04F** **KO093-11P-L132M-04F**	207	240
15	19	4640	1.00	94.90	**			
16	19	4474	1.05	91.51	28.1			
18	22	3947	1.15	80.74	31.1			
21	26	3359	1.35	68.71	33.8			
23	28	3127	1.45	63.96	34.7			
25	30	2898	1.60	59.28	35.4			
27	33	2644	1.75	54.07	36.2			
31	38	2289	2.00	46.81	37.2			
35	43	2027	2.25	41.46	37.8			
39	48	1815	1.55	37.13	38.2			
41	49	1753	2.60	35.86	38.3			
42	51	1691	2.50	34.58	38.5			
47	56	1535	1.85	31.39	38.7			
54	65	1329	2.15	27.18	39.0			
61	74	1177	2.55	24.07	39.2			
70	85	1018	2.95	20.82	39.4			
73	88	982	2.50	20.08	39.4			
18	22	3906	0.80	79.89	**	**KH083-11P-L132M-04F** **KO083-11P-L132M-04F**	157	238
21	26	3346	0.90	68.44	**			
22	27	3227	0.95	66.00	**			
23	28	3086	0.95	63.12	**			
25	30	2848	1.10	58.25	20.6			
27	32	2694	1.15	55.11	21.7			
30	36	2389	1.30	48.87	23.6			
36	43	2014	1.50	41.19	25.4			
41	50	1731	1.75	35.41	26.5			
47	57	1511	2.00	30.91	27.2			
53	64	1358	1.40	27.78	27.7			
55	67	1295	2.35	26.48	27.8			
57	69	1249	2.45	25.54	28.0			
62	75	1148	1.70	23.49	28.2			
65	79	1102	2.75	22.54	28.3			
73	88	987	1.95	20.19	28.5			
83	100	862	2.25	17.63	28.7			
97	117	738	2.65	15.10	28.9			
101	122	712	2.50	14.56	29.0			
37	45	1915	0.85	39.17	**	**KH073-11P-L132M-04F** **KO073-11P-L132M-04F**	116	236
45	55	1584	1.00	32.40	**			
53	64	1347	1.20	27.56	16.6			
61	74	1168	1.35	23.88	17.7			
73	88	986	1.60	20.17	18.5			
75	91	951	1.65	19.45	18.7			
79	95	912	1.00	18.65	**			
88	107	812	1.95	16.61	19.2			
95	115	754	1.25	15.43	19.3			
112	135	641	1.45	13.12	19.7			
129	156	556	1.65	11.37	19.9			
153	184	469	1.95	9.60	20.0			
158	191	453	2.05	9.26	20.1			
185	224	387	2.40	7.91	20.2			

K

Legend see page 181

*** ... on request*

P_N = 7.5 kW								IE3
50 Hz 7.5 kW n_{50} min^{-1}	60 Hz 9.0 kW n_{60} min^{-1}	M_2 Nm	f_B	i	at 50 Hz F_{rN} kN	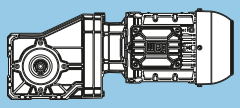	m kg	Dimension sheet see page
73	89	978	0.85	20.00	**	**KH063-11P-L132M-04F** **KO063-11P-L132M-04F**	96	234
89	108	802	0.95	16.40	**			
105	127	682	1.10	13.94	9.9			
111	134	645	0.80	13.19	**			
128	154	560	1.25	11.46	10.8			
133	160	540	1.25	11.05	10.9			
135	163	532	0.95	10.88	**			
161	195	444	1.45	9.09	11.5			
164	198	436	1.15	8.92	11.5			
193	234	371	1.35	7.58	11.8			
235	284	305	1.65	6.23	12.0			
244	295	294	1.70	6.01	12.0			
297	358	242	1.95	4.94	12.2			
90	109	792	0.80	16.19	**	**KH053-11P-L132M-04F** **KO053-11P-L132M-04F**	83	232
107	129	672	0.90	13.75	**			
129	155	557	0.80	11.40	**			
130	156	553	1.05	11.31	6.8			
134	162	533	1.10	10.91	7.0			
156	188	460	0.95	9.40	**			
163	197	439	1.25	8.97	8.0			
190	230	377	1.15	7.71	8.5			
224	270	320	1.35	6.55	8.9			
272	328	264	1.55	5.39	9.2			
282	341	254	1.60	5.19	9.2			
343	415	209	1.85	4.27	9.0			

Legend see page 181

*** ... on request*

P_N = 9.2 kW								IE3
50 Hz 9.2 kW n_{50} min^{-1}	60 Hz 11 kW n_{60} min^{-1}	M_2 Nm	f_B	i	at 50 Hz F_{rN} kN	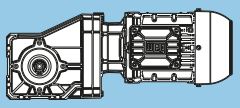	m kg	Dimension sheet see page
15	19	5711	0.80	94.90	**	KH093-11P-L132M-04G KO093-11P-L132M-04G	216	240
16	19	5507	0.85	91.51	**			
18	22	4859	0.95	80.74	**			
21	26	4135	1.10	68.71	30.1			
23	28	3849	1.20	63.96	31.6			
25	30	3567	1.30	59.28	32.9			
27	33	3254	1.40	54.07	34.2			
31	38	2817	1.60	46.81	35.7			
35	43	2495	1.85	41.46	36.7			
39	48	2234	1.25	37.13	37.3			
41	49	2158	2.10	35.86	37.5			
42	51	2081	2.00	34.58	37.7			
47	56	1889	1.50	31.39	38.1			
48	58	1836	2.50	30.51	38.2			
54	65	1636	1.75	27.18	38.6			
56	68	1563	2.90	25.97	38.7			
61	73	1448	2.10	24.07	38.9			
70	85	1253	2.40	20.82	39.1			
73	88	1208	2.00	20.08	39.2			
82	100	1066	2.85	17.72	39.3			
22	27	3972	0.80	66.00	**	KH083-11P-L132M-04G KO083-11P-L132M-04G	166	238
23	28	3798	0.80	63.12	**			
25	30	3505	0.90	58.25	**			
26	32	3316	0.95	55.11	**			
30	36	2941	1.05	48.87	19.9			
35	43	2479	1.25	41.19	23.0			
41	50	2131	1.45	35.41	24.9			
46	56	1891	1.05	31.43	25.9			
47	57	1860	1.65	30.91	26.0			
53	64	1672	1.15	27.78	26.7			
55	67	1594	1.90	26.48	27.0			
57	69	1537	2.00	25.54	27.2			
62	75	1414	1.40	23.49	27.5			
65	78	1356	2.25	22.54	27.7			
72	87	1215	1.60	20.19	28.0			
77	93	1138	2.65	18.91	28.2			
83	100	1061	1.85	17.63	28.4			
97	117	909	2.15	15.10	28.7			
100	121	876	2.00	14.56	28.7			
114	137	773	2.55	12.85	28.9			
135	164	649	3.00	10.78	29.0			
45	54	1950	0.80	32.40	**	KH073-11P-L132M-04G KO073-11P-L132M-04G	125	236
53	64	1659	0.95	27.56	**			
61	74	1437	1.10	23.88	16.0			
72	88	1214	1.30	20.17	17.4			
75	91	1170	1.35	19.45	17.6			
78	95	1122	0.85	18.65	**			
88	106	1000	1.60	16.61	18.5			
95	114	929	1.00	15.43	**			
111	135	790	1.20	13.12	19.2			
128	155	684	1.35	11.37	19.6			
152	184	578	1.60	9.60	19.8			
158	191	557	1.65	9.26	19.9			
185	223	476	1.95	7.91	20.0			

Legend see page 181

*** ... on request*

P_N = 9.2 kW								IE3
50 Hz 9.2 kW n_{50} min^{-1}	60 Hz 11 kW n_{60} min^{-1}	M_2 Nm	f_B	i	at 50 Hz F_{rN} kN	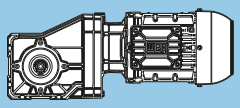	m kg	Dimension sheet see page
89	108	987	0.80	16.40	**	KH063-11P-L132M-04G KO063-11P-L132M-04G	105	234
105	127	839	0.90	13.94	**			
127	154	690	1.00	11.46	**			
132	160	665	1.05	11.05	10.1			
134	162	655	0.80	10.88	**			
161	194	547	1.20	9.09	10.9			
164	198	537	0.95	8.92	**			
193	233	456	1.10	7.58	11.4			
234	283	375	1.35	6.23	11.8			
243	294	362	1.40	6.01	11.8			
296	357	297	1.60	4.94	12.0			
129	156	681	0.85	11.31	**	KH053-11P-L132M-04G KO053-11P-L132M-04G	92	232
134	162	657	0.90	10.91	**			
155	188	566	0.80	9.40	**			
163	197	540	1.00	8.97	**			
189	229	464	0.95	7.71	**			
223	269	394	1.10	6.55	8.4			
271	327	324	1.30	5.39	8.8			
281	340	312	1.30	5.19	8.9			
342	413	257	1.50	4.27	9.2			

K

Legend see page 181

*** ... on request*

P_N = 11 kW								IE3
50 Hz 11 kW n_{50} min^{-1}	60 Hz 13 kW n_{60} min^{-1}	M_2 Nm	f_B	i	at 50 Hz F_{rN} kN	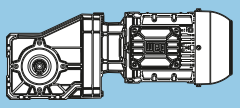	m kg	Dimension sheet see page
18	22	5770	0.80	80.74	**	**KH093-22P-160M-04E** **KO093-22P-160M-04E**	273	240
21	26	4910	0.95	68.71	**			
25	30	4236	1.10	59.28	29.6			
30	36	3554	1.30	49.73	33.0			
35	43	2963	1.55	41.46	35.2			
36	44	2889	1.60	40.43	35.5			
41	49	2563	1.80	35.86	36.5			
47	56	2259	2.00	31.61	37.3			
48	58	2180	2.10	30.51	37.5			
57	68	1856	2.45	25.97	38.2			
61	74	1720	1.75	24.07	38.4			
66	79	1601	2.85	22.40	38.6			
71	85	1488	2.05	20.82	38.8			
83	100	1266	2.40	17.72	39.1			
97	118	1078	2.80	15.08	39.3			
30	36	3492	0.90	48.87	**	**KH083-22P-160M-04E** **KO083-22P-160M-04E**	223	238
36	43	2943	1.05	41.18	19.8			
44	53	2413	1.25	33.76	23.4			
48	57	2209	1.40	30.91	24.5			
56	67	1892	1.60	26.48	25.9			
65	79	1611	1.90	22.54	26.9			
78	94	1351	2.25	18.91	27.7			
83	101	1260	1.55	17.63	27.9			
92	111	1138	2.65	15.93	28.2			
97	118	1079	1.80	15.10	28.3			
114	138	918	2.15	12.85	28.6			
136	165	770	2.55	10.78	28.9			
162	195	650	3.00	9.09	29.0			
62	74	1707	0.95	23.88	**	**KH073-22P-160M-04E** **KO073-22P-160M-04E**	182	236
73	88	1441	1.10	20.17	16.0			
89	107	1187	1.35	16.61	17.6			
129	156	813	1.15	11.37	19.2			
153	185	686	1.35	9.60	19.5			
186	224	565	1.65	7.91	19.8			

K

Legend see page 181

*** ... on request*

P_N = 15 kW								IE3
50 Hz 15 kW n_{50} min^{-1}	60 Hz 18 kW n_{60} min^{-1}	M_2 Nm	f_B	i	at 50 Hz F_{rN} kN	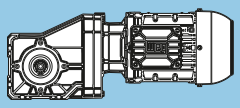	m kg	Dimension sheet see page
25	30	5796	0.80	59.28	**	**KH093-22P-160L-04F** **KO093-22P-160L-04F**	296	240
29	36	4863	0.95	49.73	**			
35	43	4054	1.15	41.46	30.6			
36	44	3953	1.15	40.43	31.1			
41	49	3506	1.30	35.86	33.2			
46	56	3091	1.50	31.61	34.8			
48	58	2983	1.55	30.51	35.2			
56	68	2539	1.80	25.97	36.5			
61	74	2354	1.30	24.07	37.0			
65	79	2190	2.10	22.40	37.4			
70	85	2036	1.50	20.82	37.8			
78	94	1837	2.45	18.79	38.2			
83	100	1733	1.75	17.72	38.4			
97	118	1475	2.05	15.08	38.8			
113	136	1272	2.40	13.01	39.1			
134	163	1067	2.85	10.91	36.7			
43	53	3301	0.95	33.76	**	**KH083-22P-160L-04F** **KO083-22P-160L-04F**	246	238
47	57	3022	1.00	30.91	**			
55	67	2589	1.20	26.48	22.4			
65	79	2204	1.40	22.54	24.5			
77	94	1849	1.65	18.91	26.1			
83	101	1724	1.15	17.63	26.5			
92	111	1558	1.95	15.93	27.1			
97	118	1477	1.35	15.10	27.3			
112	136	1277	2.35	13.06	27.9			
114	138	1256	1.55	12.85	27.9			
136	165	1054	1.85	10.78	28.4			
161	195	889	2.20	9.09	28.7			
197	238	728	2.70	7.45	28.9			
73	88	1972	0.80	20.17	**	**KH073-22P-160L-04F** **KO073-22P-160L-04F**	205	236
88	107	1624	1.00	16.61	**			
129	156	1112	0.85	11.37	**			
153	185	939	1.00	9.60	**			
185	224	773	1.20	7.91	19.3			

Legend see page 181

*** ... on request*

P_N = 18.5 kW								IE3
50 Hz 18.5 kW n_{50} min^{-1}	60 Hz 22 kW n_{60} min^{-1}	M_2 Nm	f_B	i	at 50 Hz F_{rN} kN	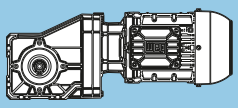	m kg	Dimension sheet see page
30	36	5977	0.80	49.73	**	KH093-22P-180M-04E KO093-22P-180M-04E	310	240
36	44	4859	0.95	40.43	**			
41	49	4310	1.05	35.86	29.1			
47	56	3799	1.20	31.61	31.9			
48	58	3667	1.25	30.51	32.5			
57	68	3121	1.45	25.97	34.7			
66	79	2692	1.70	22.40	36.1			
71	85	2502	1.20	20.82	36.6			
78	94	2258	2.00	18.79	37.3			
83	100	2130	1.45	17.72	37.6			
96	116	1836	2.50	15.28	38.2			
97	118	1812	1.70	15.08	38.2			
113	136	1564	1.95	13.01	38.7			
135	163	1311	2.30	10.91	37.5			
166	200	1066	2.85	8.87	34.6			
56	67	3183	0.95	26.48	**	KH083-22P-180M-04E KO083-22P-180M-04E	260	238
65	79	2709	1.15	22.54	21.6			
78	94	2273	1.35	18.91	24.2			
92	111	1915	1.60	15.93	25.8			
97	118	1815	1.10	15.10	26.2			
113	136	1570	1.90	13.06	27.1			
114	138	1544	1.30	12.85	27.1			
136	165	1296	1.50	10.78	27.8			
162	195	1093	1.80	9.09	28.3			
197	238	895	2.20	7.45	28.7			

P_N = 22 kW								IE3
50 Hz 22 kW n_{50} min^{-1}	60 Hz 26 kW n_{60} min^{-1}	M_2 Nm	f_B	i	at 50 Hz F_{rN} kN	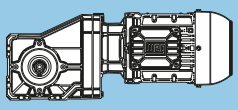	m kg	Dimension sheet see page
36	44	5778	0.80	40.43	**	KH093-22P-180L-04F KO093-22P-180L-04F	331	240
41	49	5125	0.90	35.86	**			
47	56	4518	1.00	31.61	**			
48	58	4361	1.05	30.51	28.8			
57	68	3712	1.25	25.97	32.3			
66	79	3202	1.45	22.40	34.4			
71	85	2976	1.05	20.82	35.2			
78	94	2686	1.70	18.79	36.1			
83	100	2533	1.20	17.72	36.6			
96	116	2184	2.10	15.28	37.4			
97	118	2155	1.40	15.08	37.5			
113	136	1859	1.65	13.01	38.1			
123	149	1708	2.65	11.95	38.4			
135	163	1559	1.95	10.91	38.4			
166	200	1268	2.40	8.87	35.4			
56	67	3785	0.80	26.48	**	KH083-22P-180L-04F KO083-22P-180L-04F	281	238
65	79	3222	0.95	22.54	**			
78	94	2703	1.15	18.91	21.6			
92	111	2277	1.35	15.93	24.2			
97	118	2158	0.90	15.10	**			
113	136	1867	1.60	13.06	26.0			
114	138	1837	1.10	12.85	26.1			
136	165	1541	1.30	10.78	27.1			
162	195	1299	1.50	9.09	27.8			
197	238	1065	1.85	7.45	28.4			

Legend see page 181

*** ... on request*

P_N = 30 kW								IE3
50 Hz 30 kW n_{50} min^{-1}	60 Hz 36 kW n_{60} min^{-1}	M_2 Nm	f_B	i	at 50 Hz F_{rN} kN	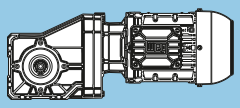	m kg	Dimension sheet see page
49	58	5906	0.80	30.51	**	KH093-22P-200L-04E KO093-22P-200L-04E	389	240
57	69	5027	0.90	25.97	**			
66	79	4336	1.05	22.40	29.0			
79	95	3637	1.25	18.79	32.6			
84	100	3430	0.90	17.72	**			
97	116	2958	1.55	15.28	35.3			
98	118	2919	1.05	15.08	35.4			
114	137	2518	1.20	13.01	36.6			
124	149	2313	1.95	11.95	37.1			
136	163	2112	1.45	10.91	37.6			
167	201	1717	1.75	8.87	37.0			
213	256	1343	2.25	6.94	33.5			

Legend see page 181

*** ... on request*

K

Selection tables - Gear units

Structure of the selection tables

1	2	3	4	5	6									
Type	$i_{ges.}$	M_{2nenn}	n_2	i_{exakt}	IEC motor frame size									
		[Nm]	[min^{-1}]		63	71	80	90	100	112	132	160	180	200
K022	68.88	110	20	551/8										
2 stages 7	61.75	102	23	247/4										
	53.65	110	26	1073/20										
	48.10	110	29	481/10										
n_1=1400 min^{-1} 8	43.50	110	32	87/2										
	39.00	110	36	39/1										
	34.27	110	41	377/11										
Maximum torque 110 Nm 9	30.88	51	45	247/8										
	30.73	110	46	338/11										

1 Type of gear unit

2 Total ratio

3 Permissible output torque at S1 operation (f_B = 1.0)

4 Output speed (gear unit) at n_1 = 1400 min^{-1}

5 Exact mathematical ratio

6 Possible motor frame sizes

7 Number of gear stages

8 Motor speed

9 Maximum torque

K

Type	$i_{ges.}$	M_{2nenn} [Nm]	n_2 [min^{-1}]	i_{exakt}	IEC motor frame size 63	71	80	90	100	112	132	160	180	200
K022	68.88	110	20	551/8										
2 stages n_1=1400 min^{-1} Maximum torque 110 Nm	61.75	102	23	247/4										
	53.65	110	26	1073/20										
	48.10	110	29	481/10										
	43.50	110	32	87/2										
	39.00	110	36	39/1										
	34.27	110	41	377/11										
	30.88	51	45	247/8										
	30.73	110	46	338/11										
	26.41	110	53	1479/56										
	24.05	81	58	481/20										
	23.68	110	59	663/28										
	20.63	110	68	1073/52										
	19.50	81	72	39/2										
	18.50	107	76	37/2										
	15.41	101	91	493/32										
	15.36	81	91	169/11										
	13.81	97	101	221/16										
	11.84	81	118	663/56										
	11.60	92	121	58/5										
	10.40	89	135	52/5										
	9.25	81	151	37/4										
	8.51	83	164	783/92										
	7.63	80	183	351/46										
	6.91	81	203	221/32										
	5.20	81	269	26/5										
	3.82	77	367	351/92										
K033	217.88	200	6.4	1743/8										
3 stages n_1=1400 min^{-1} Maximum torque 200 Nm	177.19	200	7.9	2835/16										
	140.80	200	9.9	6195/44										
	108.75	200	13	435/4										
	86.83	200	16	4515/52										
	71.93	200	19	1079/15										
	65.63	200	21	525/8										
	58.50	200	24	117/2										
	49.88	200	28	399/8										
	46.48	200	30	1534/33										
	38.80	200	36	1785/46										
	35.90	200	39	754/21										
	30.29	200	46	1575/52										
	29.97	129	47	1079/36										
	28.67	200	49	86/3										
	24.38	160	57	195/8										
	21.67	200	65	65/3										
	19.37	163	72	3835/198										
	16.47	200	85	247/15										
	14.96	163	94	1885/126										
	12.81	192	109	884/69										
	11.94	163	117	215/18										
	10.00	178	140	10/1										
	9.03	163	155	325/36										
	6.86	149	204	247/36										
	5.34	137	262	1105/207										
	4.17	126	336	25/6										

Legend see page 217

Type	$i_{ges.}$	M_{2nenn}	n_2	i_{exakt}	IEC motor frame size									
		[Nm]	[min⁻¹]		63	71	80	90	100	112	132	160	180	200
K043	277.79	400	5.0	14445/52	■	■	■	■						
	227.16	400	6.2	23625/104	■	■	■	■						
	179.37	400	7.8	25650/143	■	■	■	■						
	139.08	400	10	50625/364	■	■	■	■						
	113.83	400	12	38475/338	■	■	■	■	■	■				
	89.17	378	16	535/6	■	■	■	■						
	87.62	400	16	18225/208	■	■	■	■	■	■				
	72.92	400	19	875/12	■	■	■	■						
	66.20	400	21	6885/104	■	■	■	■	■	■				
	57.58	400	24	1900/33	■	■	■	■						
	54.18	400	26	16200/299	■	■	■	■	■	■				
	47.07	200	30	93197/1980	■	■	■	■						
	44.64	400	31	625/14	■	■	■	■						
	43.93	400	32	7425/169			■	■	■	■				
	38.49	270	36	30485/792	■	■	■	■						
3 stages	36.78	400	38	3825/104			■	■	■	■				
	36.54	400	38	475/13	■	■	■	■	■	■				
	30.39	280	46	33098/1089	■	■	■	■						
n_1=1400 min⁻¹	29.81	400	47	775/26			■	■	■	■				
	28.74	400	49	20925/728					■	■				
Maximum torque	28.13	400	50	225/8	■	■	■	■	■	■				
400 Nm	23.57	261	59	21775/924	■	■	■	■						
	21.25	375	66	85/4	■	■	■	■	■	■				
	19.29	247	73	1273/66	■	■	■	■	■	■				
	17.39	353	81	400/23	■	■	■	■	■	■				
	14.85	230	94	2613/176	■	■	■	■	■	■				
	14.10	331	99	550/39			■	■	■	■				
	11.81	314	119	425/36			■	■	■	■				
	11.22	213	125	14807/1320	■	■	■	■	■	■				
	9.57	295	146	775/81			■	■	■	■				
	9.23	292	152	775/84					■	■				
	9.18	202	152	6968/759	■	■	■	■	■	■				
	7.44	190	188	67/9			■	■	■	■				
	6.23	181	225	14807/2376			■	■	■	■				
	5.05	171	277	27001/5346			■	■	■	■				
	4.87	169	287	27001/5544					■	■				

Legend see page 217

Type	$i_{ges.}$	M_{2nenn}	n_2	i_{exakt}	IEC motor frame size									
		[Nm]	[min⁻¹]		63	71	80	90	100	112	132	160	180	200
K053	245.70	600	5.7	2457/10										
	194.73	600	7.2	2142/11										
	151.20	600	9.3	756/5										
	124.06	600	11	8064/65										
	96.08	600	15	3843/40										
	80.46	564	17	7644/95										
	73.08	600	19	1827/25										
	63.77	600	22	13328/209										
	60.26	600	23	1386/23										
	49.52	600	28	4704/95										
	49.43	600	28	3213/65										
	42.00	600	33	42/1										
	40.63	600	34	50176/1235										
	38.32	268	37	728/19										
	34.53	600	41	518/15										
3 stages	33.30	600	42	333/10										
	31.46	600	44	2989/95										
	30.37	392	46	19040/627										
n_1=1400 min⁻¹	27.39	600	51	630/23										
	23.93	600	58	11368/475										
Maximum torque	23.58	432	59	448/19										
600 Nm	19.73	600	71	8624/437										
	19.35	432	72	14336/741										
	16.19	600	86	19992/1235										
	14.98	432	93	854/57										
	13.75	600	102	784/57										
	11.40	432	123	3248/285										
	11.31	576	124	29008/2565										
	10.91	569	128	1036/95										
	9.40	432	149	12320/1311										
	8.97	537	156	3920/437										
	7.71	432	182	1904/247										
	6.55	432	214	1120/171										
	5.39	407	260	8288/1539										
	5.19	403	270	296/57										
	4.27	380	328	5600/1311										

Legend see page 217

Type	$i_{ges.}$	M_{2nenn} [Nm]	n_2 [min^{-1}]	i_{exakt}	IEC motor frame size 63	71	80	90	100	112	132	160	180	200
K063	198.00	820	7.1	198/1	■	■	■	■						
	156.92	820	8.9	2040/13	■	■	■	■						
	121.85	820	11	1584/13	■	■	■	■						
	99.98	820	14	16896/169	■	■	■	■	■	■	■			
	81.53	571	17	1386/17	■	■	■	■						
	77.42	820	18	2013/26	■	■	■	■	■	■	■			
	64.62	820	22	840/13	■	■	■	■						
	58.89	820	24	3828/65	■	■	■	■	■	■	■			
	50.17	820	28	11088/221	■	■	■	■						
	48.56	820	29	14520/299	■	■	■	■	■	■	■			
	44.35	311	32	754/17	■	■	■	■						
	41.17	820	34	118272/2873	■	■	■	■	■	■	■			
	39.83	820	35	6732/169			■	■	■	■	■			
	35.15	454	40	1160/33	■	■	■	■						
	33.85	820	41	440/13			■	■	■	■	■			
3 stages	31.88	820	44	14091/442	■	■	■	■	■	■	■			
	27.83	782	50	3256/117			■	■	■	■	■			
	27.29	500	51	464/17	■	■	■	■						
n_1=1400 min^{-1}	26.84	773	52	2442/91					■	■	■			
	24.25	820	58	26796/1105	■	■	■	■	■	■	■			
Maximum torque	22.40	500	63	14848/663	■	■	■	■	■	■	■			
820 Nm	22.07	730	63	6600/299			■	■	■	■	■			
	20.00	803	70	101640/5083	■	■	■	■	■	■	■			
	17.34	500	81	1769/102	■	■	■	■	■	■	■			
	16.40	757	85	2772/169			■	■	■	■	■			
	13.94	722	100	3080/221			■	■	■	■	■			
	13.19	500	106	3364/255	■	■	■	■	■	■	■			
	11.46	681	122	22792/1989			■	■	■	■	■			
	11.05	673	127	2442/221					■	■	■			
	10.88	500	129	12760/1173	■	■	■	■	■	■	■			
	9.09	635	154	46200/5083			■	■	■	■	■			
	8.92	500	157	116/13			■	■	■	■	■			
	7.58	500	185	1160/153			■	■	■	■	■			
	6.23	500	225	8584/1377			■	■	■	■	■			
	6.01	495	233	2146/357					■	■	■			
	4.94	467	283	5800/1173			■	■	■	■	■			
K073	256.14	1550	5.5	5635/22	■	■	■	■						
	197.75	1550	7.1	791/4	■	■	■	■						
	165.85	1550	8.4	2156/13	■	■	■	■	■	■	■			
	130.16	1550	11	4165/32	■	■	■	■	■	■	■			
	100.45	1550	14	2009/20	■	■	■	■	■	■	■			
	99.87	1288	14	18676/187	■	■	■	■						
	83.09	1550	17	1911/23	■	■	■	■	■	■	■			
	77.11	1550	18	6554/85	■	■	■	■						
	70.67	1550	20	3675/52			■	■	■	■	■			
	64.67	1550	22	71456/1105	■	■	■	■	■	■	■			
	61.25	1550	23	245/4			■	■	■	■	■	■		
	51.72	1550	27	931/18			■	■	■	■	■	■		
	50.75	1550	28	203/4	■	■	■	■	■	■	■			
	49.88	1550	28	399/8					■	■	■			
3 stages	47.56	613	29	26680/561	■	■	■	■						
	42.61	1550	33	980/23			■	■	■	■	■	■		
n_1=1400 min^{-1}	39.17	1550	36	16646/425	■	■	■	■	■	■	■			
	36.72	757	38	13108/357	■	■	■	■						
	32.40	1550	43	63336/1955	■	■	■	■	■	■	■			
Maximum torque	30.79	910	45	20416/663	■	■	■	■	■	■	■			
1550 Nm	27.56	1550	51	6090/221			■	■	■	■	■			
	24.17	910	58	145/6	■	■	■	■	■	■	■			
	23.88	1550	59	406/17			■	■	■	■	■	■		
	20.17	1550	69	15428/765			■	■	■	■	■	■		
	19.45	1550	72	1653/85					■	■	■			
	18.65	910	75	4756/255	■	■	■	■	■	■	■			
	16.61	1550	84	6496/391			■	■	■	■	■	■		
	15.43	910	91	6032/391	■	■	■	■	■	■	■			
	13.12	910	107	2900/221			■	■	■	■	■			
	11.37	910	123	580/51			■	■	■	■	■	■		
	9.60	910	146	4408/459			■	■	■	■	■	■		
	9.26	910	151	1102/119					■	■	■			
	7.91	910	177	9280/1173			■	■	■	■	■	■		

K

Type	$i_{ges.}$	M_{2nenn} [Nm]	n_2 [min^{-1}]	i_{exakt}	IEC motor frame size									
					63	71	80	90	100	112	132	160	180	200
K083	206.12	3000	6.8	13398/65										
3 stages n_1=1400 min^{-1} Maximum torque 3000 Nm	163.14	3000	8.6	26103/160										
	142.45	3000	9.8	2849/20										
	125.90	3000	11	25179/200										
	106.46	3000	13	12243/115										
	91.51	3000	15	23793/260										
	79.89	3000	18	6391/80										
	79.75	2851	18	319/4										
	68.44	3000	20	616/9										
	66.00	3000	21	66/1										
	63.12	2860	22	16159/256										
	58.25	3000	24	6699/115										
	55.11	3000	25	5291/96										
	48.87	3000	29	2541/52										
	48.71	3000	29	15587/320										
	45.48	1626	31	2001/44										
	41.19	3000	34	7579/184										
	41.18	3000	34	9471/230										
	35.99	1631	39	101361/2816										
	35.41	3000	40	1133/32										
	33.76	3000	41	4389/130										
	31.43	1916	45	11063/352										
	30.91	3000	45	11869/384										
	27.78	1901	50	97773/3520										
	26.48	3000	53	715/27										
	25.54	3000	55	715/28										
	23.49	1916	60	2067/88										
	22.54	3000	62	4147/184										
	20.19	1886	69	7107/352										
	18.91	3000	74	605/32										
	17.63	1937	79	24817/1408										
	15.93	3000	88	5863/368										
	15.10	1937	93	1495/99										
	14.56	1748	96	4485/308										
	13.06	2974	107	209/16										
	12.85	1937	109	1131/88										
	10.78	1937	130	345/32										
	9.09	1937	154	1599/176										
	7.45	1937	188	1311/176										

Legend see page 217

Type	$i_{ges.}$	M_{2nenn}	n_2	i_{exakt}	IEC motor frame size									
		[Nm]	[min⁻¹]		63	71	80	90	100	112	132	160	180	200
K093	169.25	4500	8.3	21156/125										
	143.08	4500	9.8	49364/345										
	123.86	4500	11	241531/1950										
	109.70	4500	13	24682/225										
	94.90	4500	15	192167/2025										
	91.51	4500	15	192167/2100										
	80.74	4500	17	139277/1725										
	68.71	4500	20	66994/975										
	63.96	4500	22	1599/25										
	59.28	4500	24	102254/1725										
	54.07	4500	26	3731/69										
	49.73	4500	28	19393/390										
	46.81	4500	30	5617/120										
	41.46	4500	34	3731/90										
	40.43	4500	35	75809/1875										
3 stages	37.13	2785	38	8541/230										
	35.86	4500	39	58097/1620										
n_1=1400 min⁻¹	34.58	4149	40	58097/1680										
	31.61	4500	44	22919/725										
	31.39	2806	45	33215/1058										
Maximum torque 4500 Nm	30.51	4500	46	42107/1380										
	27.18	2795	52	10001/368										
	25.97	4500	54	779/30										
	24.07	2991	58	6643/276										
	22.40	4500	62	15457/690										
	20.82	2991	67	103441/4968										
	20.08	2409	70	103441/5152										
	18.79	4500	75	451/24										
	17.72	2991	79	74971/4232										
	15.28	4500	92	22919/1500										
	15.08	2991	93	1387/92										
	13.01	2991	108	27521/2116										
	11.95	4500	117	6929/580										
	10.91	2991	128	4015/368										
	8.87	2991	158	40807/4600										
	6.94	2991	202	37011/5336										

Legend see page 217

K

K

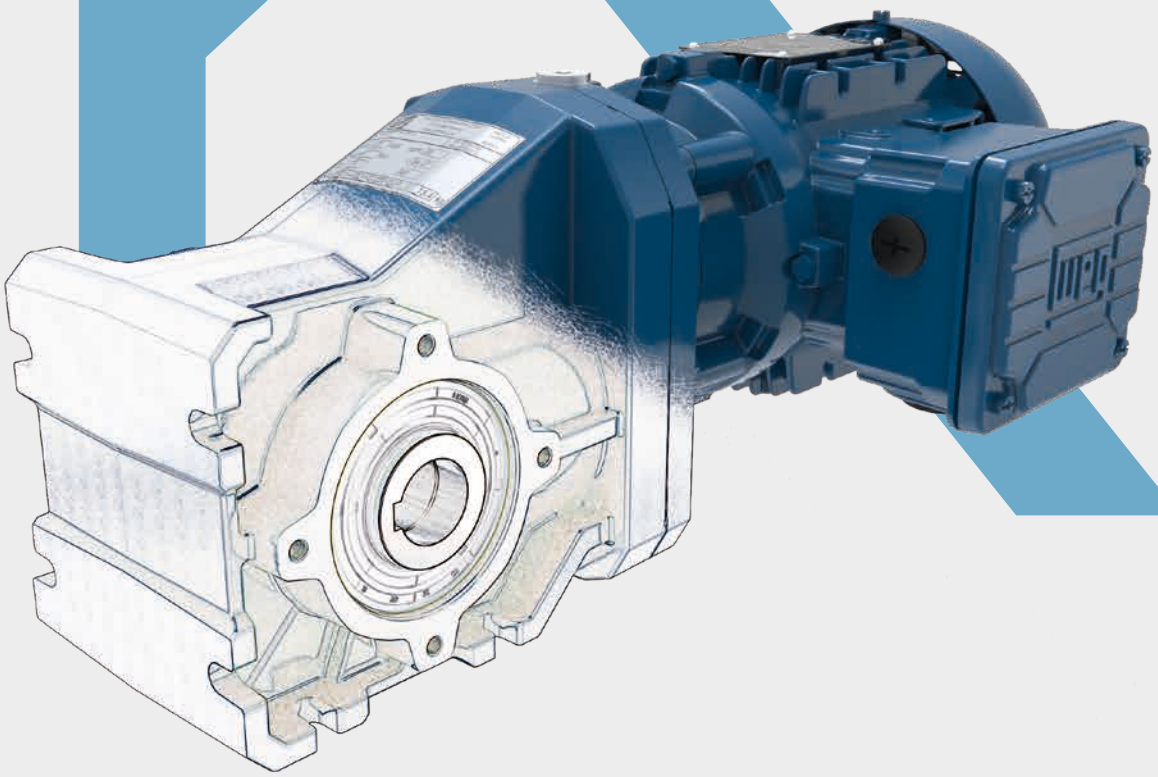

KH02 - Hollow shaft

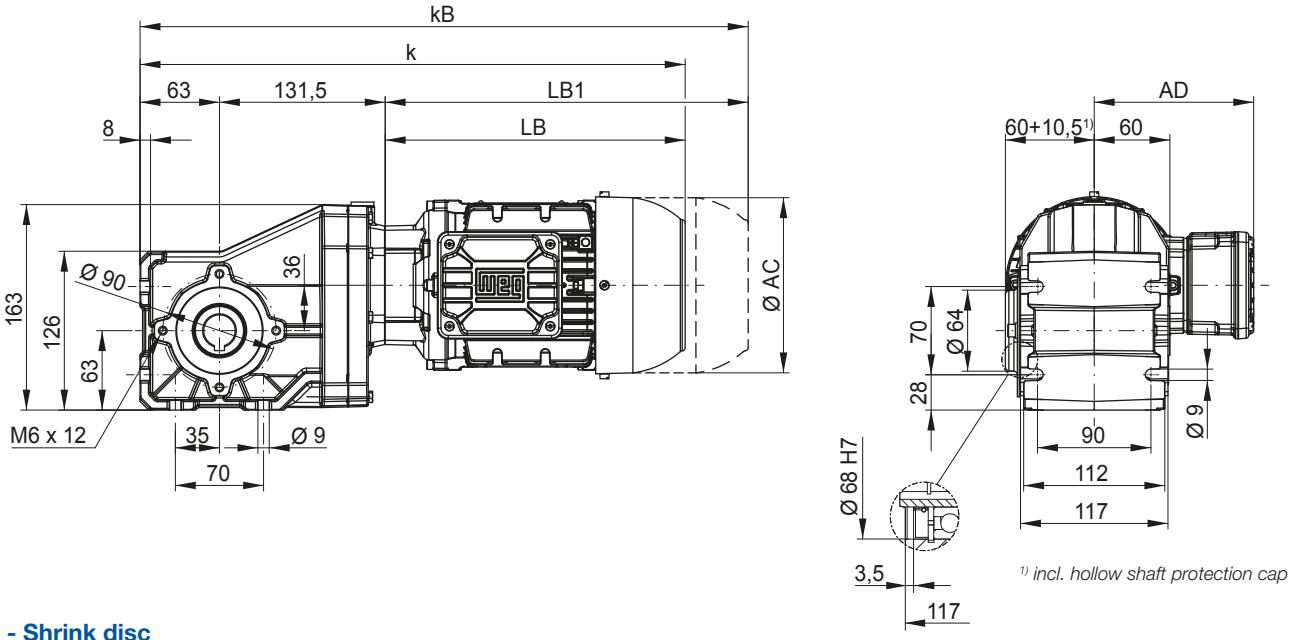

KD02 - Shrink disc

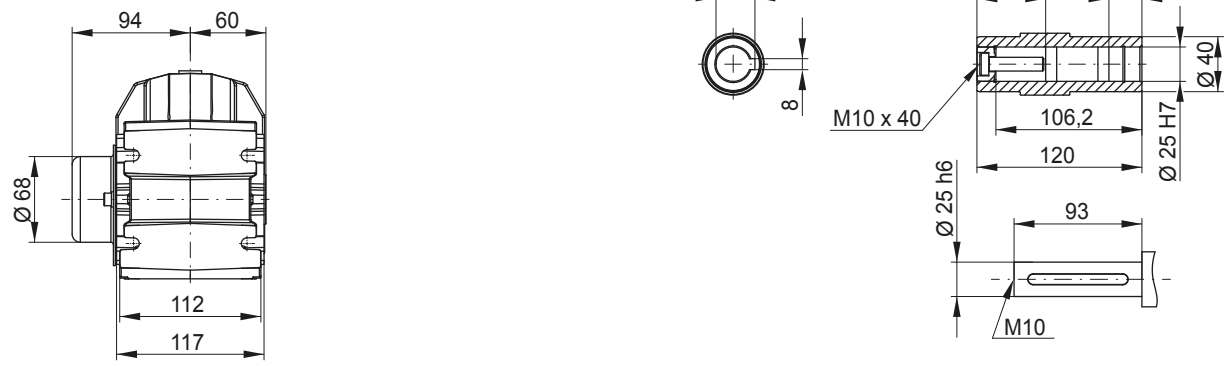

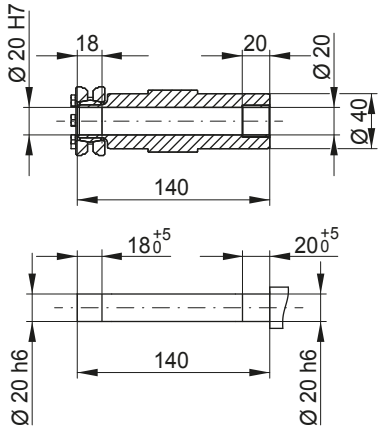

KS02 - Output shaft
KB02 - Output shaft on both sides

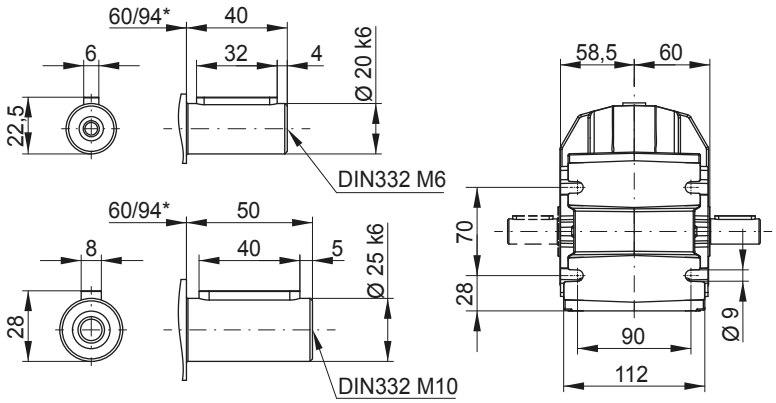

Motor fr. / Dimension	63	71	80	90S/L
AC	126	141	159	178
AD	128	136	145	155
k	399	433	441	483
kB	443	482	499	556
LB	204	238	246	288
LB1	248	287	304	361

Motor dimension sheets see page 266. Description of motor lengths LB and LB1 see page 270.

**Designs KS(KB)/KF*

KO02 - B5 flange execution with hollow shaft

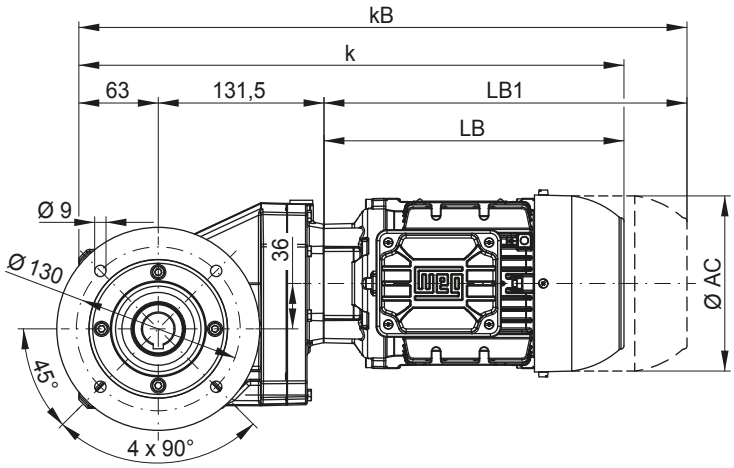

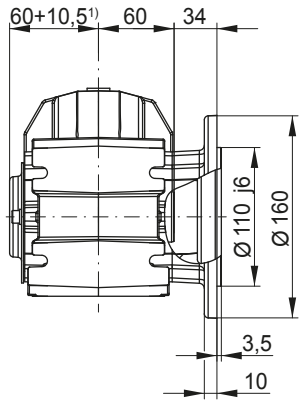

¹) *incl. hollow shaft protection cap*

KF02 - B5 flange execution with output shaft

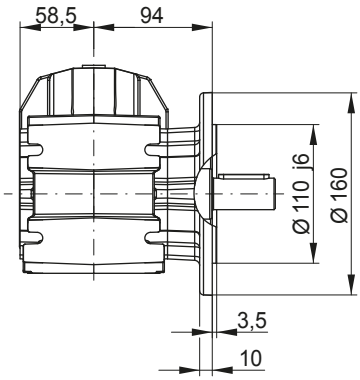

KP02 - B5 flange execution with hollow shaft and shrink disc

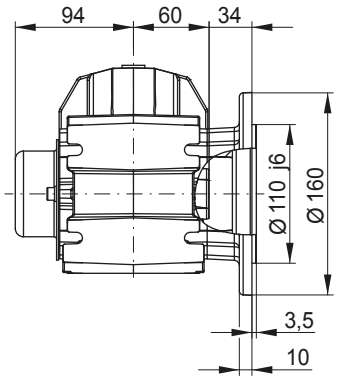

KT02 - Hollow shaft with torque arm **

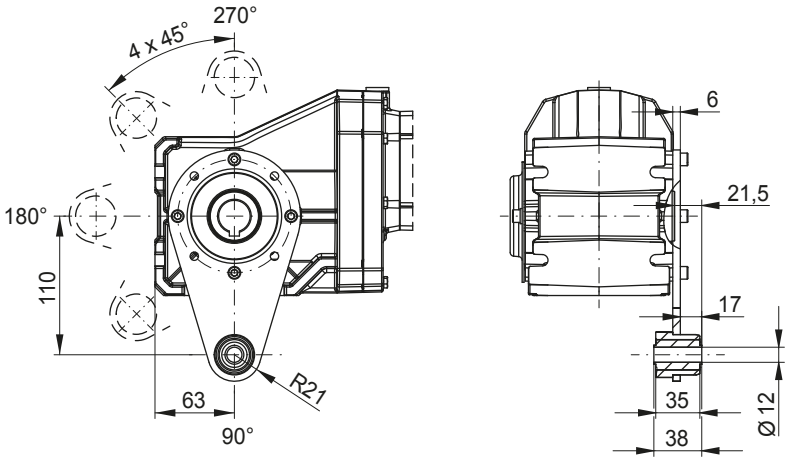

Torque arm possible positions:
90°, 135°, 180°, 225°, 270°

KU02 - Hollow shaft with shrink disc and torque arm **

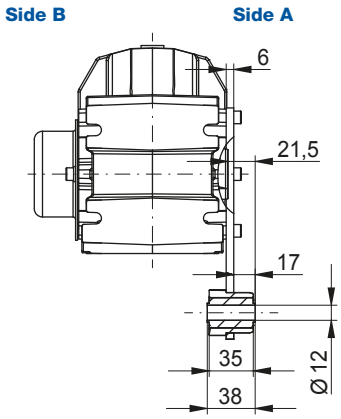

Dimensions in mm.

*** Torque arm may be mounted on side A or side B.*

KH03 - Hollow shaft

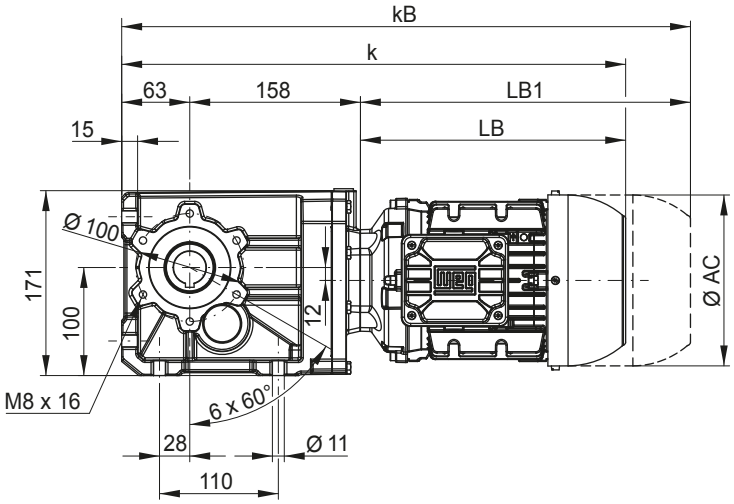

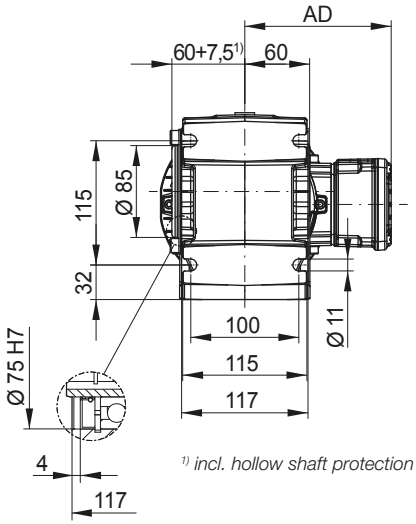

¹) *incl. hollow shaft protection cap*

K

KD03 - Shrink disc

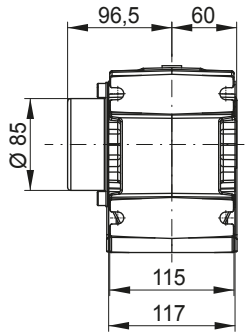

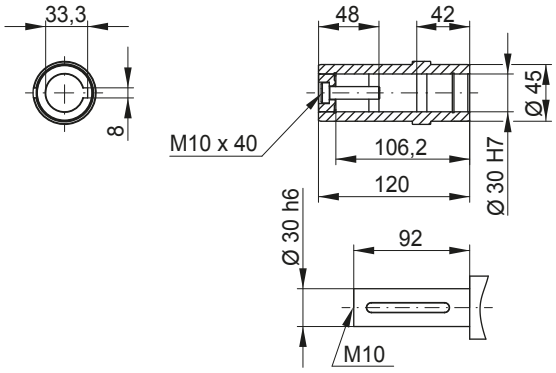

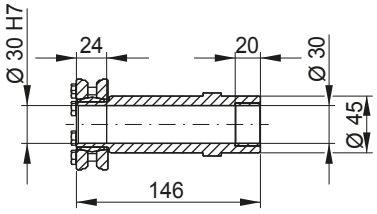

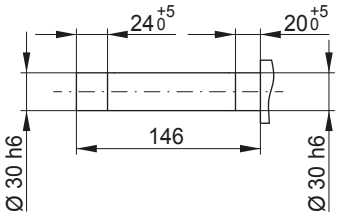

KS03 - Output shaft
KB03 - Output shaft on both sides

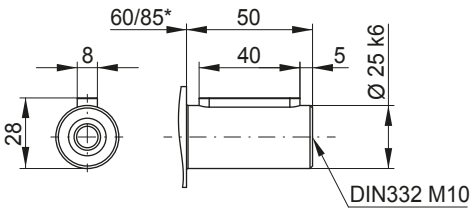

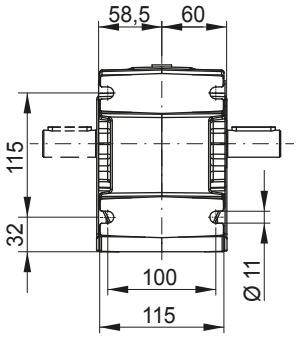

Motor fr. / Dimension	63	71	80	90S/L	100L	L100L
AC	126	141	159	178	199	199
AD	128	136	145	155	165	165
k	425	459	467	509	559	597
kB	469	508	525	582	643	681
LB	204	238	246	288	338	376
LB1	248	287	304	361	422	460

Motor dimension sheets see page 266. Description of motor lengths LB and LB1 see page 270.

**Designs KS(KB)/KF*

KO03 - B5 flange execution with hollow shaft

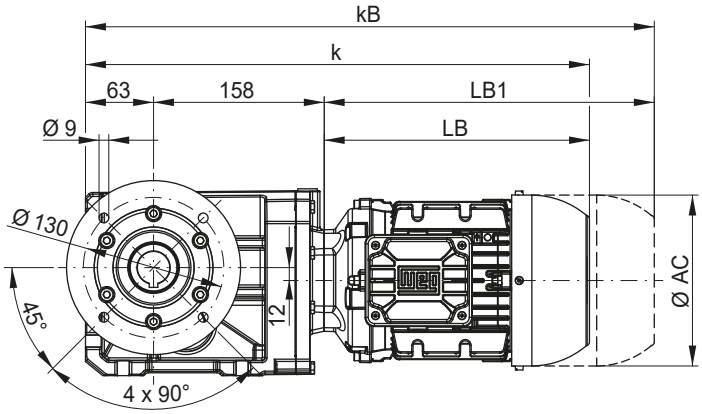

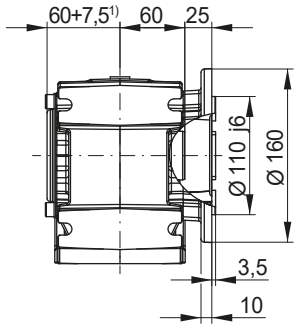

[1)] *incl. hollow shaft protection cap*

KF03 - B5 flange execution with output shaft

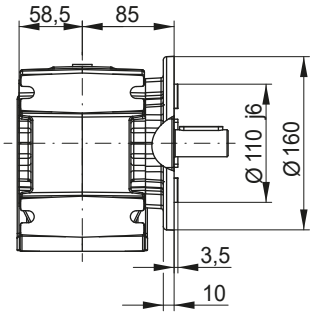

KP03 - B5 flange execution with hollow shaft and shrink disc

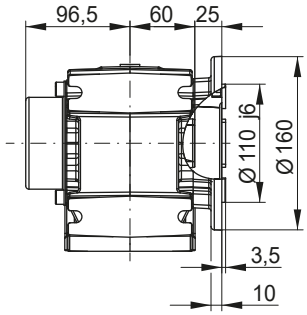

KT03 - Hollow shaft with torque arm **

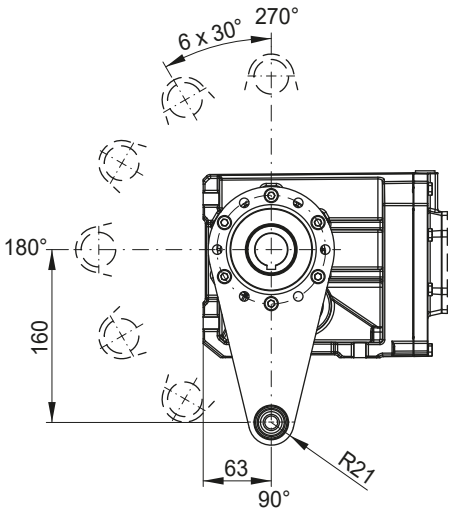

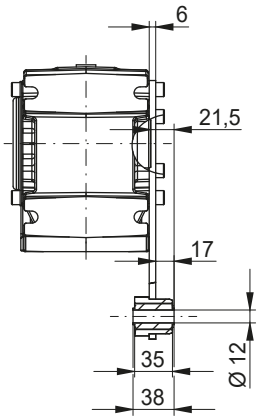

Torque arm possible positions:
90 °, 120 °, 150 °, 180 °, 210 °, 240 °, 270 °

KU03 - Hollow shaft with shrink disc and torque arm **

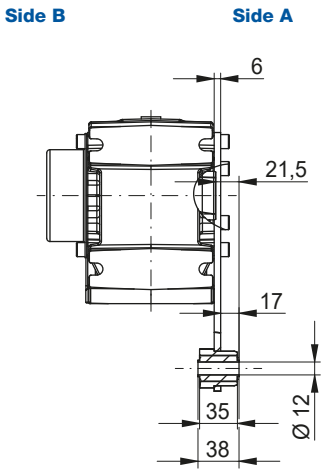

Dimensions in mm.

*** Torque arm may be mounted on side A or side B.*

KH04 - Hollow shaft

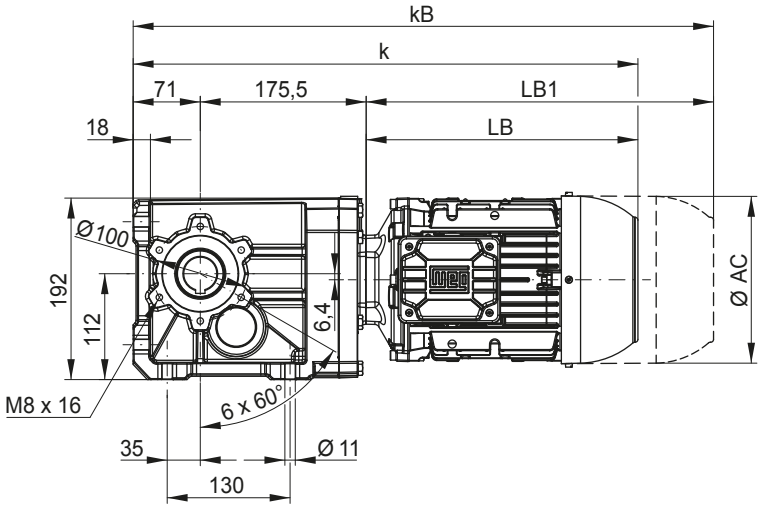

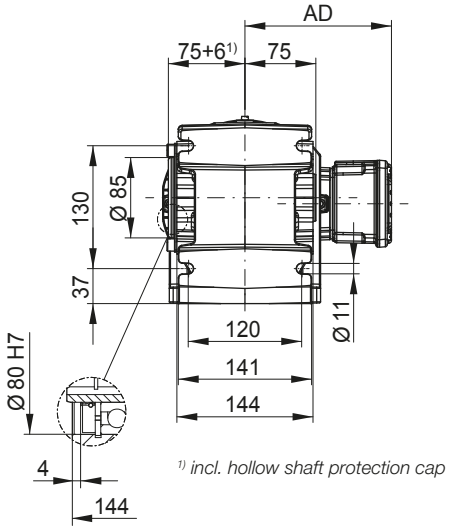

¹) incl. hollow shaft protection cap

K

KD04 - Shrink disc

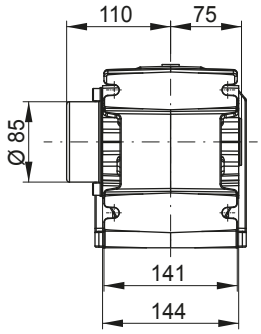

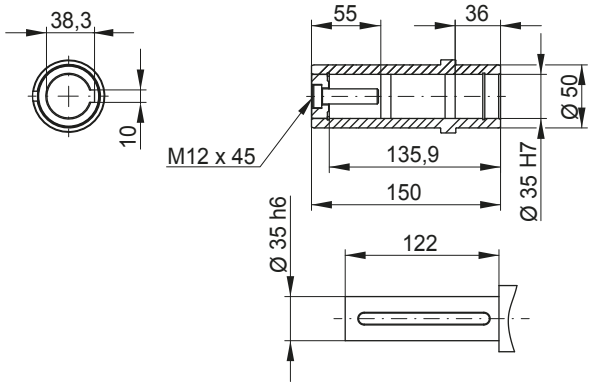

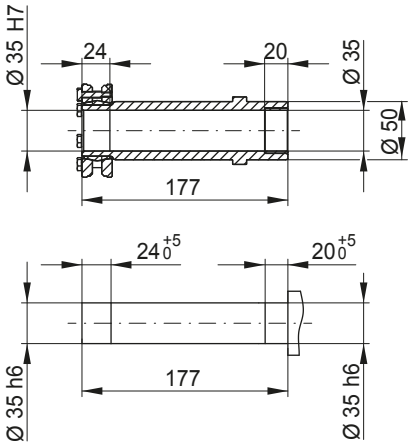

KS04 - Output shaft
KB04 - Output shaft on both sides

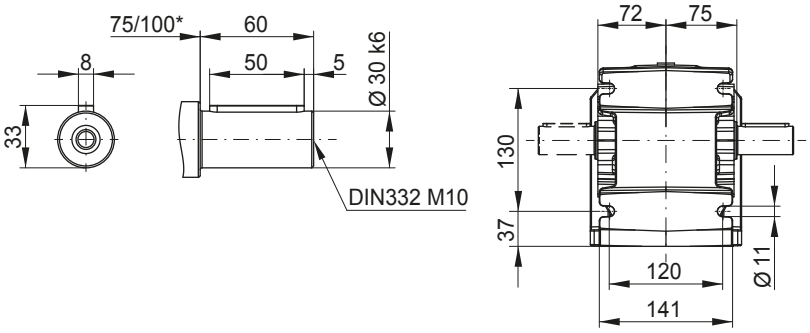

Motor fr. / Dimension	63	71	80	90S/L	100L	L100L	112M
AC	126	141	159	178	199	199	221
AD	128	136	145	155	165	165	185
k	451	485	493	535	585	623	595
kB	495	534	551	608	669	707	682
LB	204	238	246	288	338	376	348
LB1	248	287	304	361	422	460	435

Motor dimension sheets see page 266. Description of motor lengths LB and LB1 see page 270.

**Designs KS(KB)/KF*

KO04 - B5 flange execution with hollow shaft

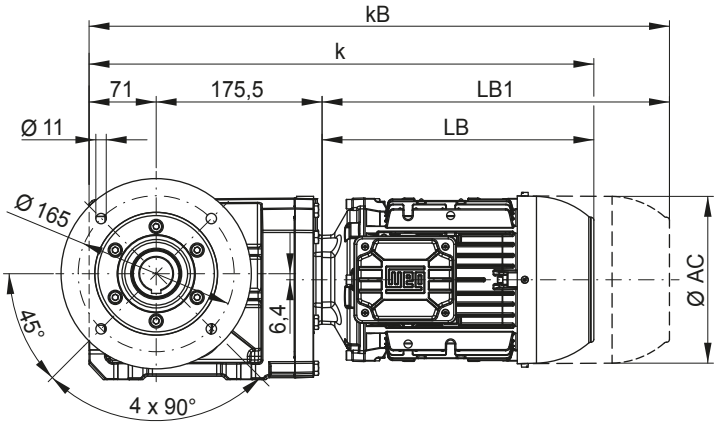

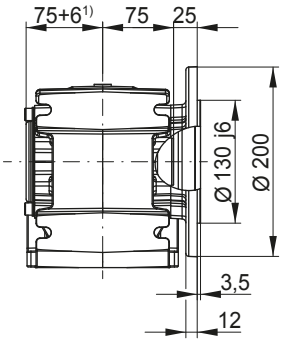

[1)] *incl. hollow shaft protection cap*

KF04 - B5 flange execution with output shaft

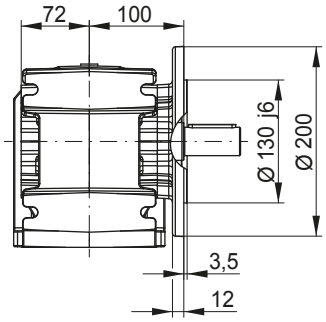

KP04 - B5 flange execution with hollow shaft and shrink disc

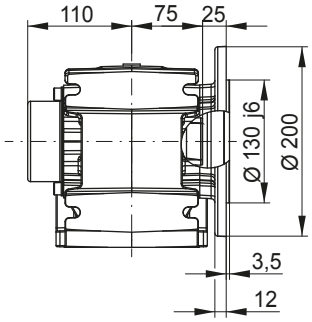

KT04 - Hollow shaft with torque arm **

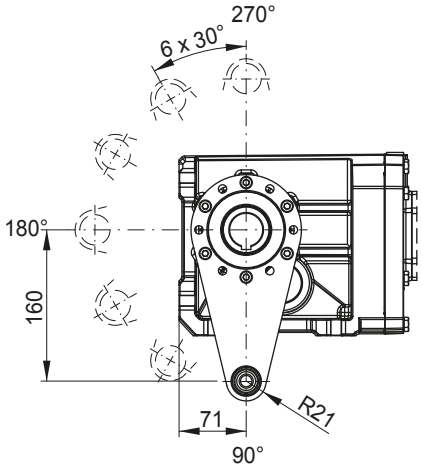

Torque arm possible positions:
90°, 120°, 150°, 180°, 210°, 240°, 270°

KU04 - Hollow shaft with shrink disc and torque arm **

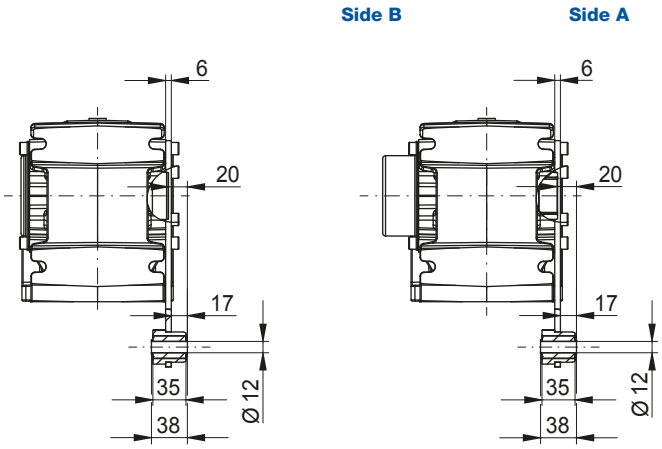

Dimensions in mm.

*** Torque arm may be mounted on side A or side B.*

KH05 - Hollow shaft

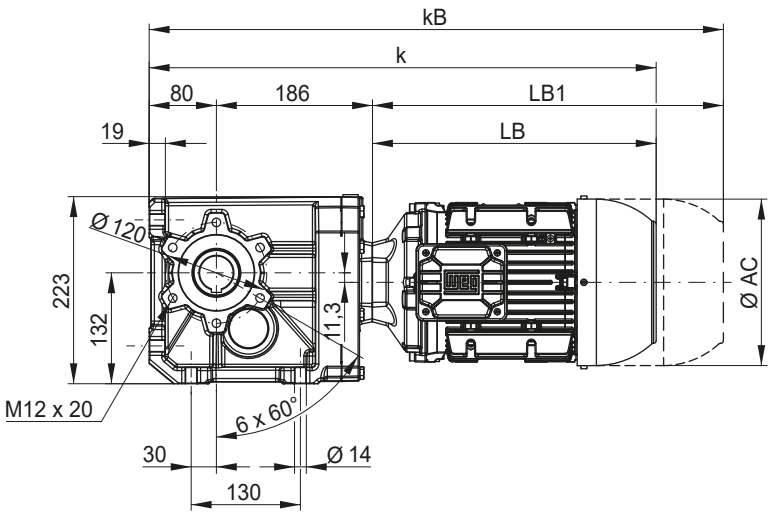

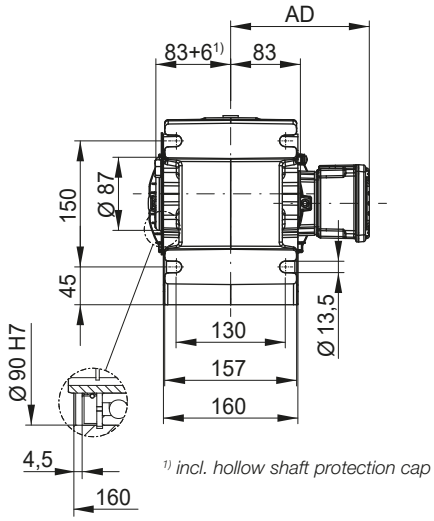

[1)] *incl. hollow shaft protection cap*

K

KD05 - Shrink disc

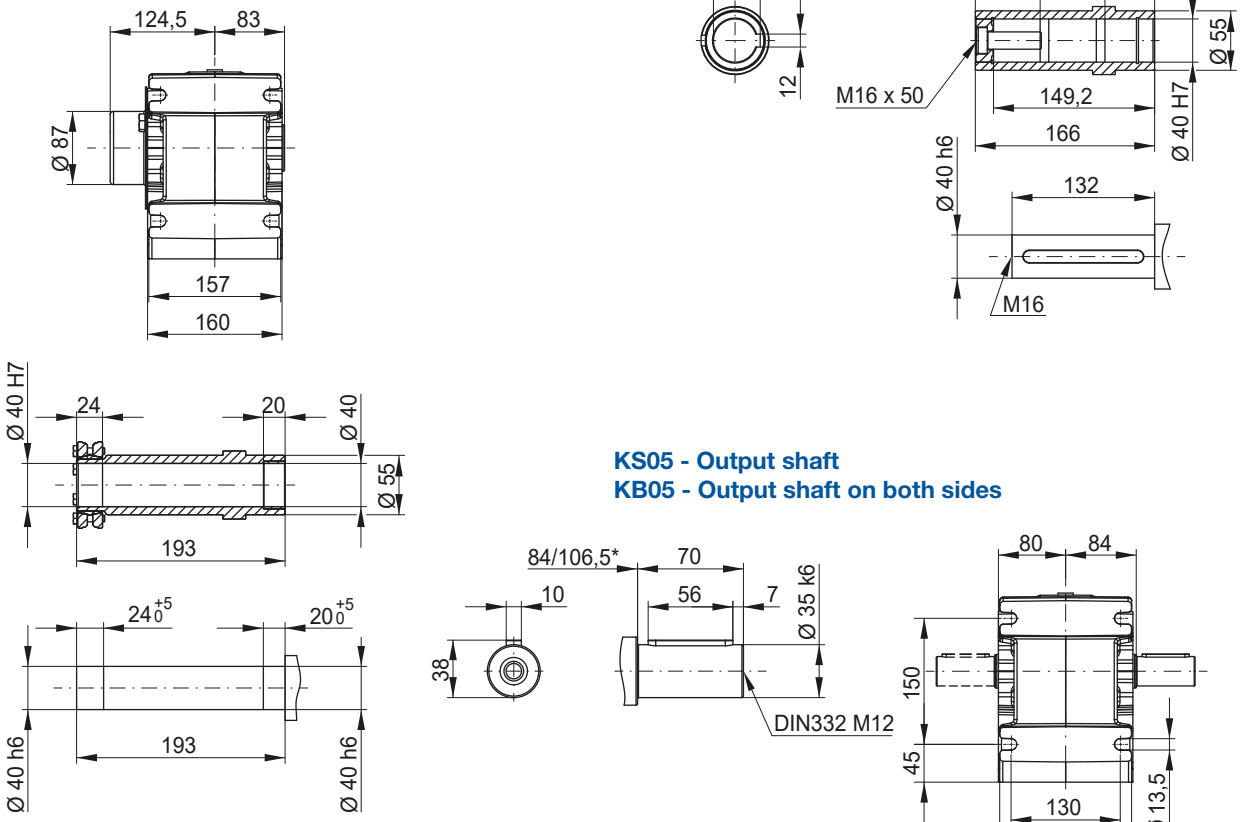

KS05 - Output shaft
KB05 - Output shaft on both sides

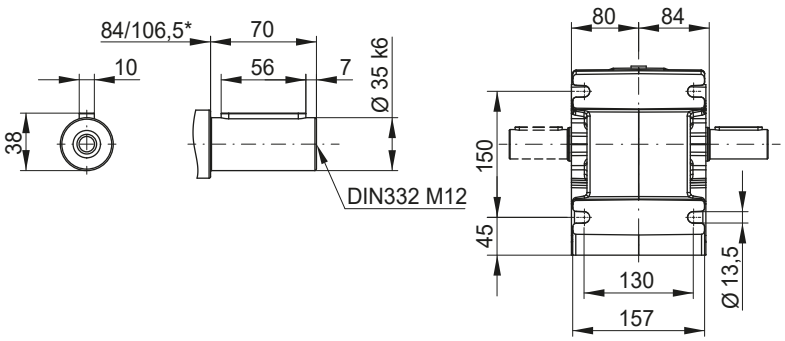

Motor fr. / Dimension	63	71	80	90S/L	100L	L100L	112M	132S,M	L132M
AC	126	141	159	178	199	199	221	261	261
AD	128	136	145	155	165	165	185	205	205
k	470	504	512	554	604	642	614	679	717
kB	514	553	570	627	688	726	701	797	835
LB	204	238	246	288	338	376	348	413	451
LB1	248	287	304	361	422	460	435	531	569

Motor dimension sheets see page 266. Description of motor lengths LB and LB1 see page 270.

**Design KS(KB)/KF*

KO05 - B5 flange execution with hollow shaft

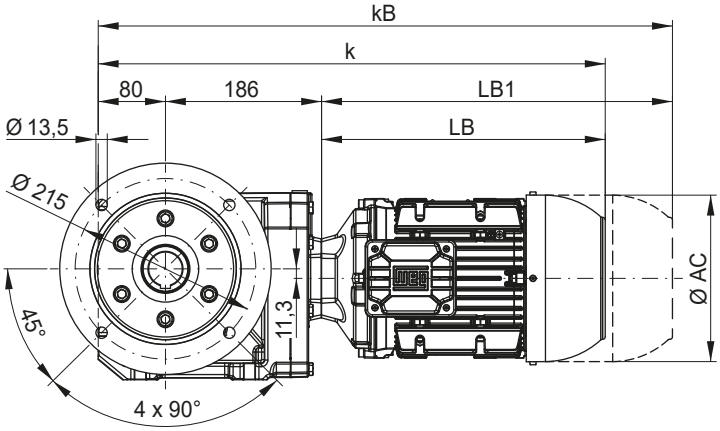

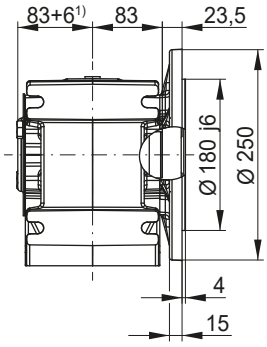

[1)] *incl. hollow shaft protection cap*

KF05 - B5 flange execution with output shaft

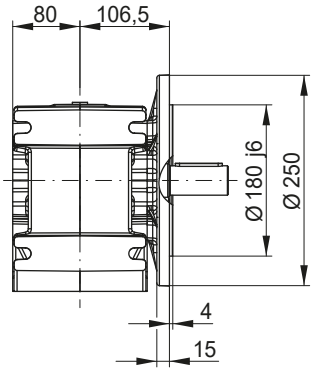

KP05 - B5 flange execution with hollow shaft and shrink disc

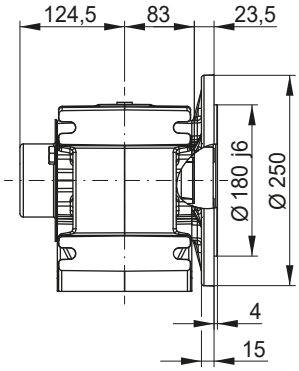

KT05 - Hollow shaft with torque arm **

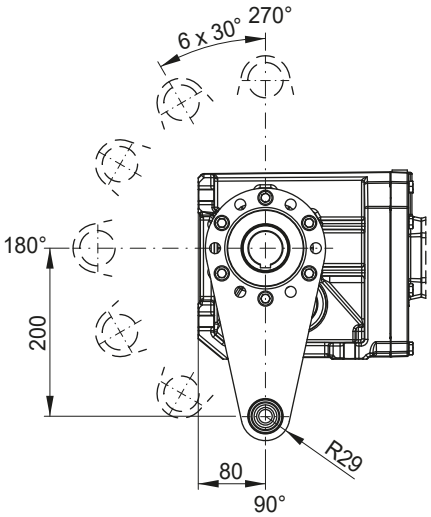

KU05 - Hollow shaft with shrink disc and torque arm **

Side B

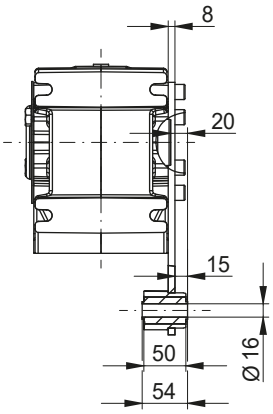

Side A

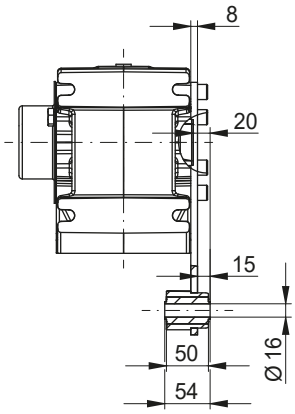

Torque arm possible positions:
90°, 120°, 150°, 180°, 210°, 240°, 270°

Dimensions in mm.

*** Torque arm may be mounted on side A or side B.*

KH06 - Hollow shaft

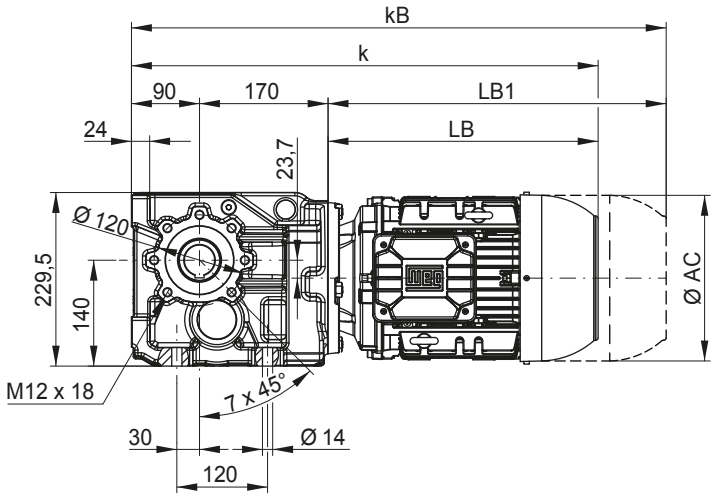

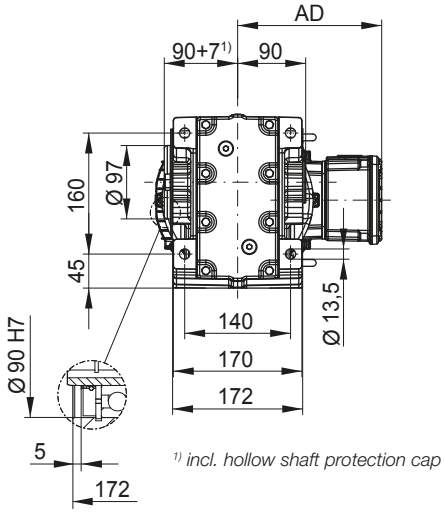

¹⁾ *incl. hollow shaft protection cap*

K

KD06 - Shrink disc

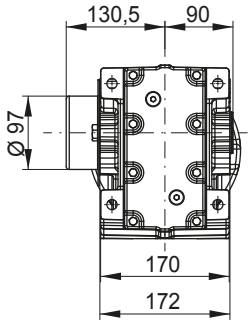

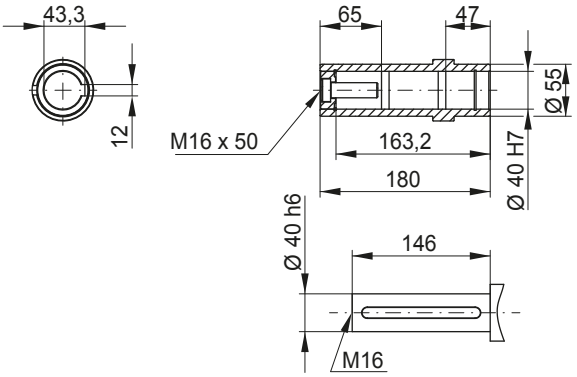

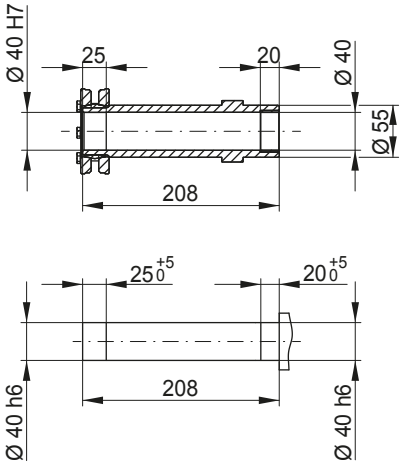

KS06 - Output shaft
KB06 - Output shaft on both sides

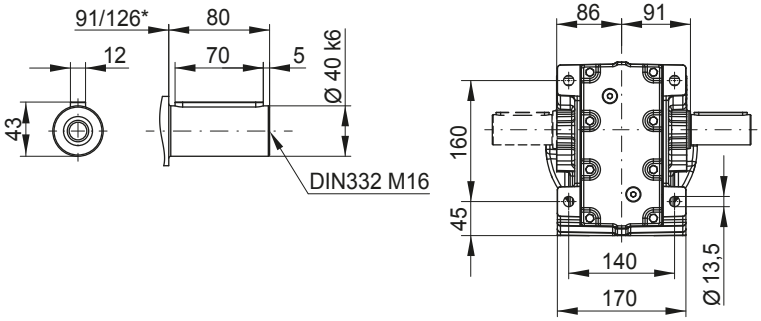

Motor fr. / Dimension	63	71	80	90S/L	100L	L100L	112M	132S,M	L132M
AC	126	141	159	178	199	199	221	261	261
AD	128	136	145	155	165	165	185	205	205
k	464	498	506	548	598	636	608	673	711
kB	508	547	564	621	682	720	695	791	829
LB	204	238	246	288	338	376	348	413	451
LB1	248	287	304	361	422	460	435	531	569

Motor dimension sheets see page 266. Description of motor lengths LB and LB1 see page 270.

**Designs KS(KB)/KF*

KO06 - B5 flange execution with hollow shaft

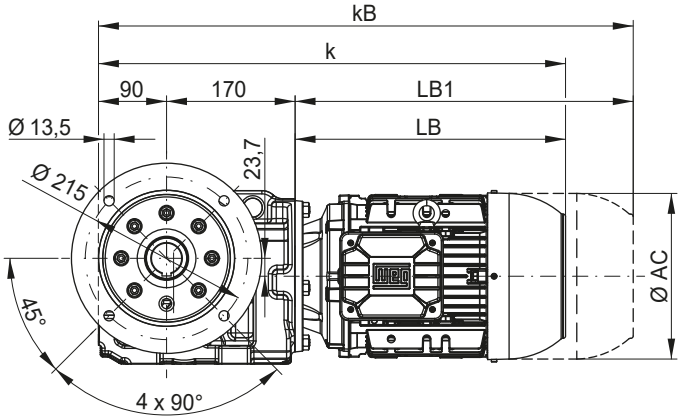

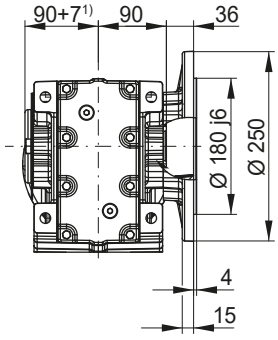

[1)] *incl. hollow shaft protection cap*

KF06 - B5 flange execution with output shaft

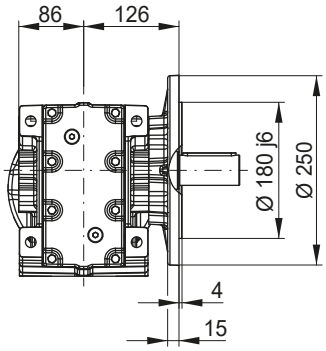

KP06 - B5 flange execution with hollow shaft and shrink disc

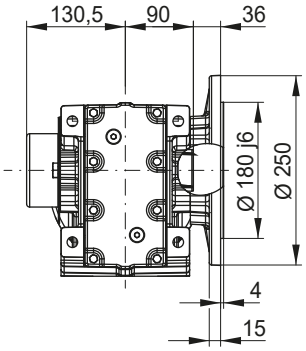

KT06 - Hollow shaft with torque arm **

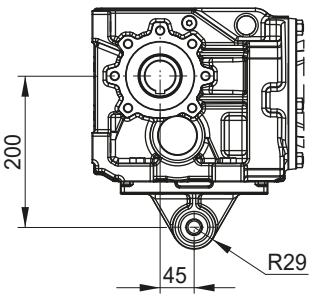

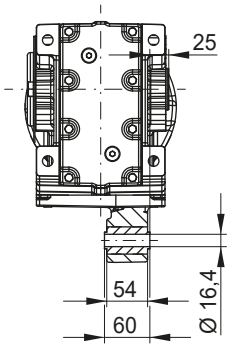

KU06 - Hollow shaft with shrink disc and torque arm **

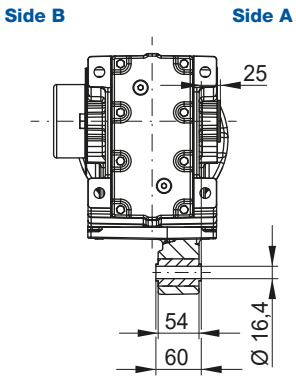

Dimensions in mm.

*** Torque arm may be mounted on side A or side B.*

KH07 - Hollow shaft

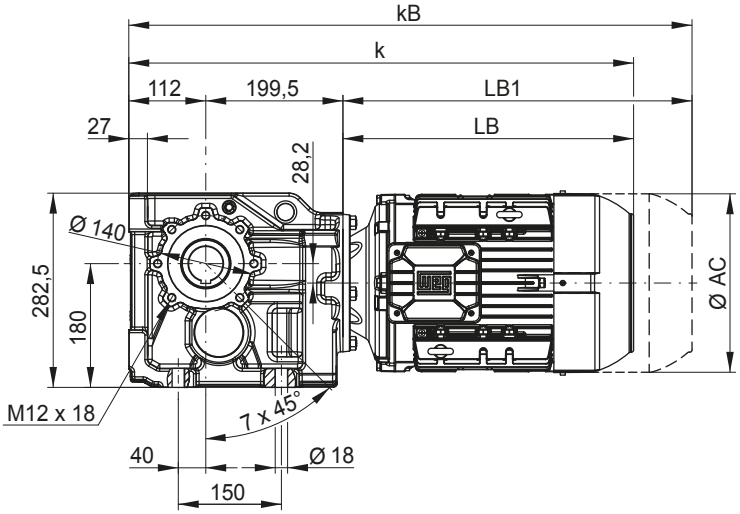

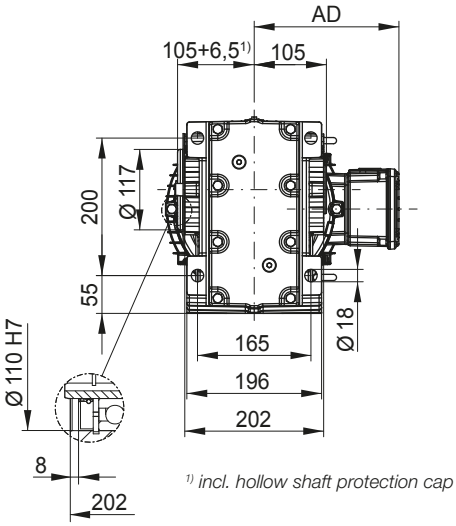

¹) *incl. hollow shaft protection cap*

K

KD07 - Shrink disc

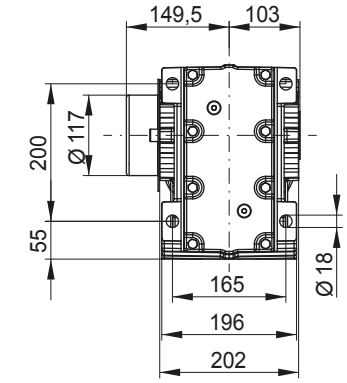

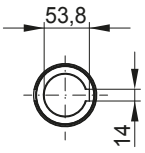

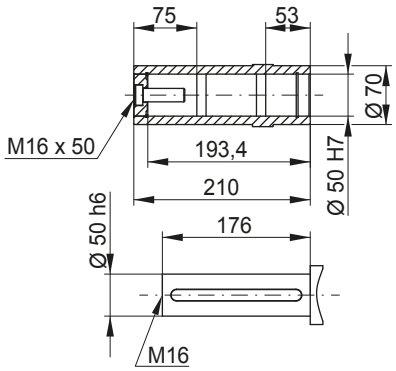

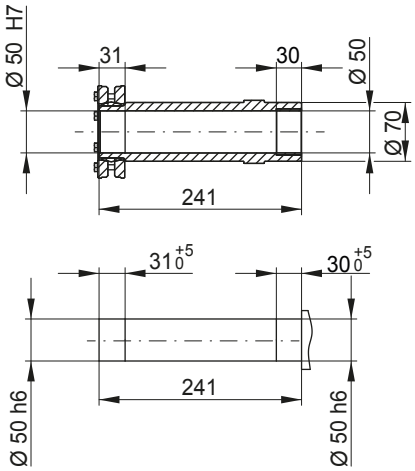

KS07 - Output shaft
KB07 - Output shaft on both sides

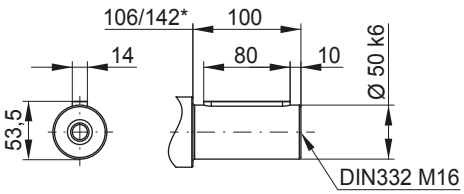

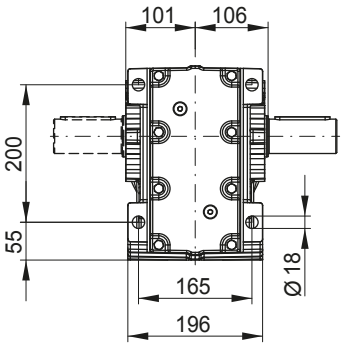

Motor fr. / Dimension	63	71	80	90S/L	100L	L100L	112M	132S,M	L132M	160M	160L
AC	126	141	159	178	199	199	221	261	261	318	318
AD	128	136	145	155	165	165	185	205	205	266	266
k	516	550	558	600	650	688	660	725	763	857	901
kB	560	599	616	673	734	772	747	843	881	981	1025
LB	204	238	246	288	338	376	348	413	451	545	589
LB1	248	287	304	361	422	460	435	531	569	669	713

Motor dimension sheets see page 266. Description of motor lengths LB and LB1 see page 270.

**Designs KS(KB)/KF*

KO07 - B5 flange execution with hollow shaft

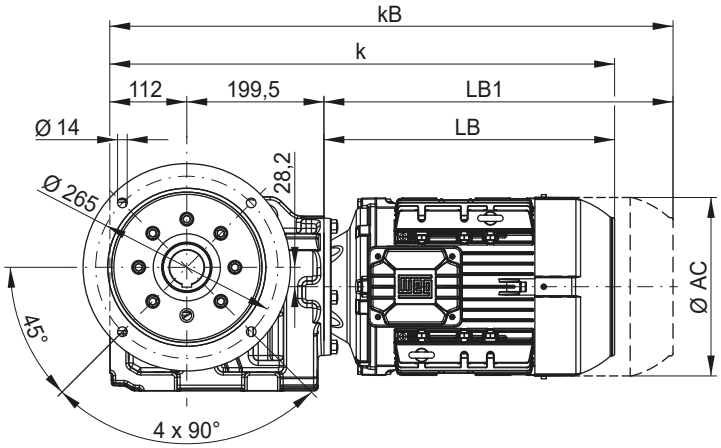

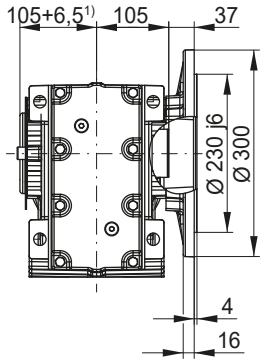

[1)] *incl. hollow shaft protection cap*

KF07 - B5 flange execution with output shaft

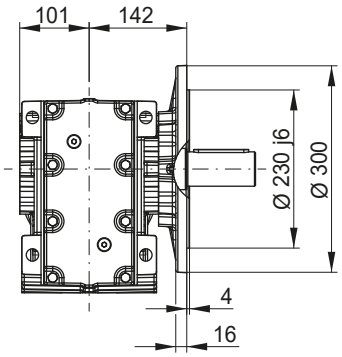

KP07 - B5 flange execution with hollow shaft and shrink disc

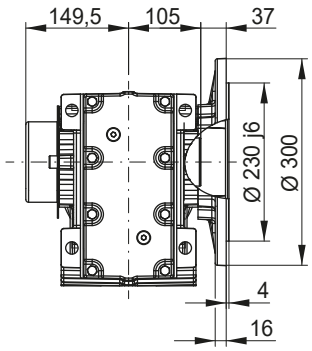

KT07 - Hollow shaft with torque arm **

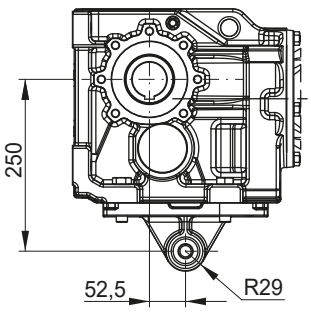

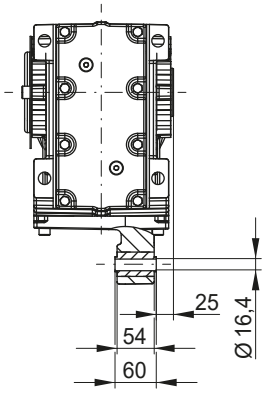

KU07 - Hollow shaft with shrink disc and torque arm **

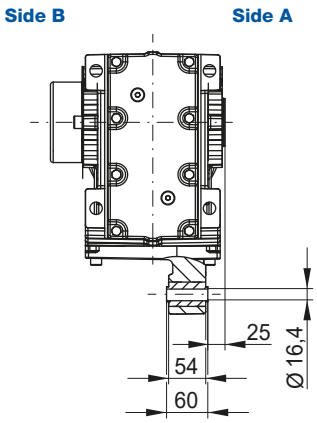

Dimensions in mm.

*** Torque arm may be mounted on side A or side B.*

KH08 - Hollow shaft

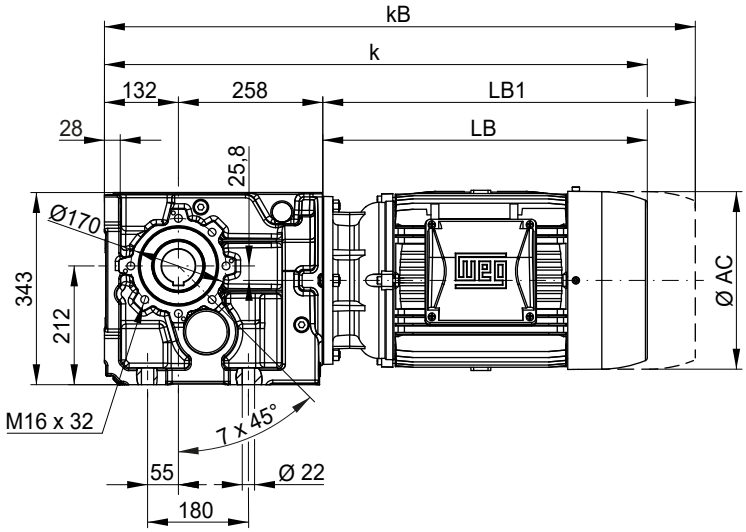

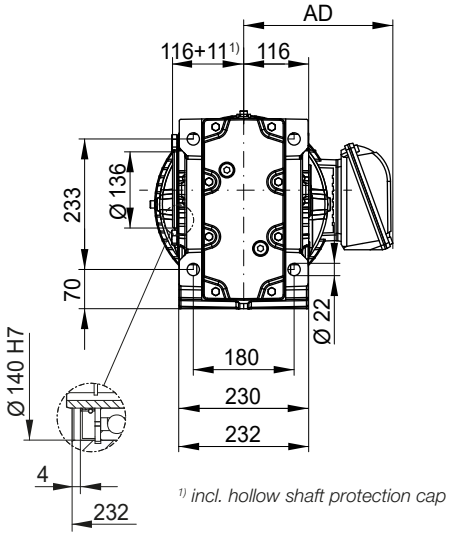

¹) *incl. hollow shaft protection cap*

K

KD08 - Shrink disc

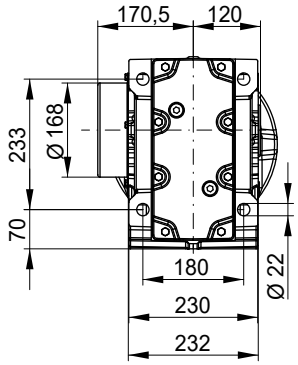

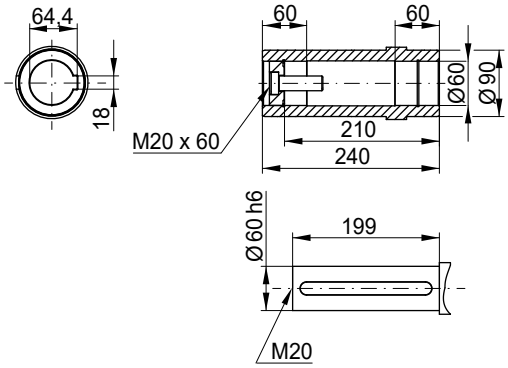

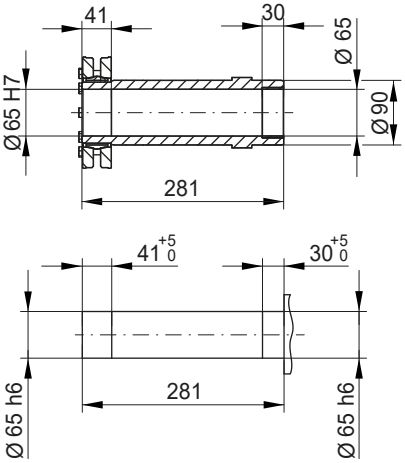

KS08 - Output shaft
KB08 - Output shaft on both sides

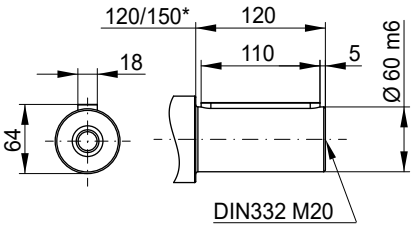

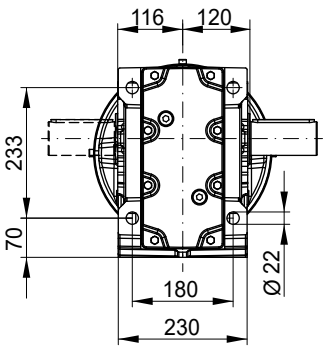

Motor fr. / Dimension	63	71	80	90S/L	100L	L100L	112M	132S,M	L132M	160M	160L	180M	180L
AC	126	141	159	178	199	199	221	261	261	318	318	347	347
AD	128	136	145	155	165	165	185	205	205	266	266	281	281
k	594	628	636	678	728	766	738	803	841	925	969	993	1031
kB	638	677	694	751	812	850	825	921	959	1049	1093	1111	1149
LB	204	238	246	288	338	376	348	413	451	535	579	603	641
LB1	248	287	304	361	422	460	435	531	569	659	703	721	759

Motor dimension sheets see page 266. Description of motor lengths LB and LB1 see page 270.

**Designs KS(KB)/KF*

KO08 - B5 flange execution with hollow shaft

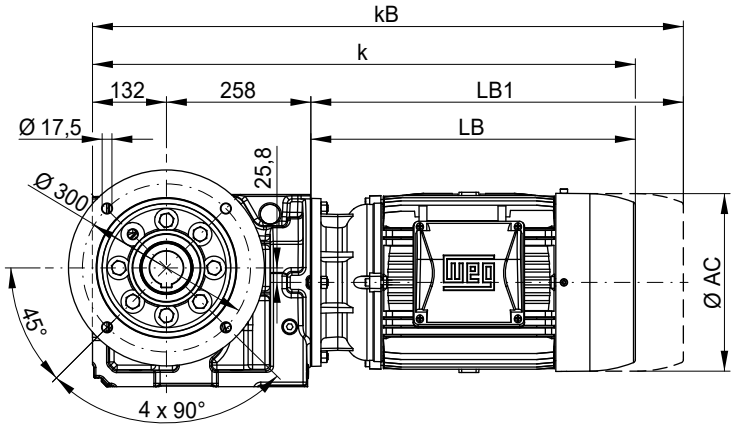

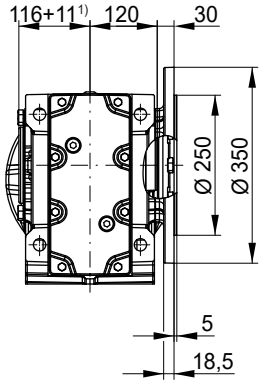

[1)] *incl. hollow shaft protection cap*

KF08 - B5 flange execution with output shaft

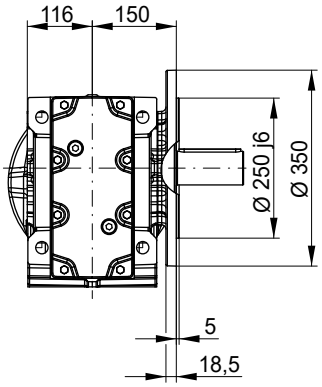

KP08 - B5 flange execution with hollow shaft and shrink disc

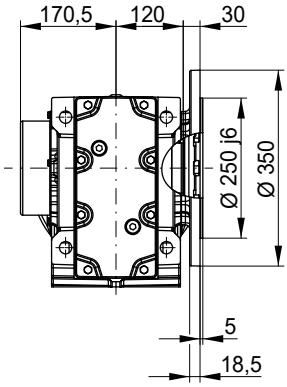

KT08 - Hollow shaft with torque arm **

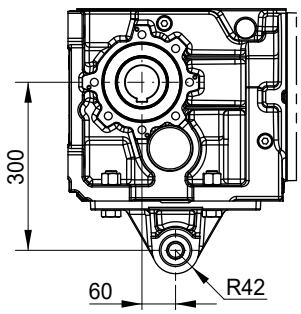

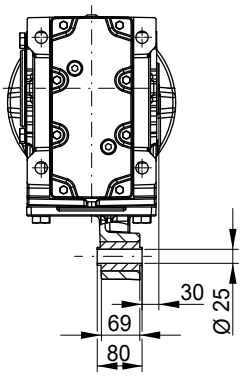

KU08 - Hollow shaft with shrink disc and torque arm **

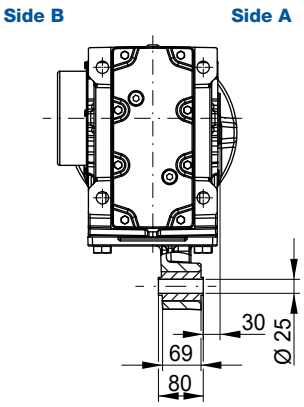

Dimensions in mm.

*** Torque arm may be mounted on side A or side B.*

KH09 - Hollow shaft

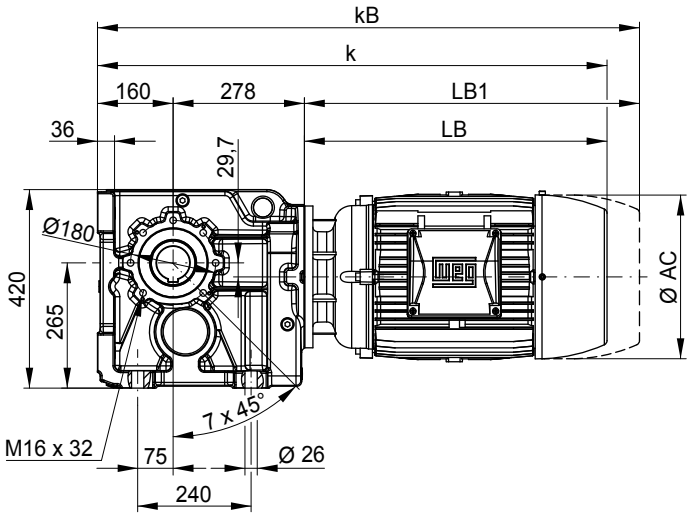

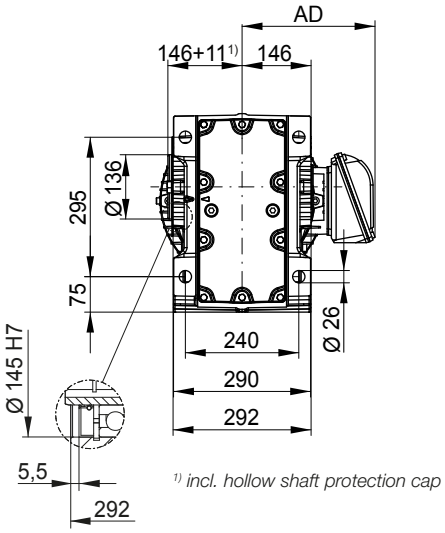

¹) *incl. hollow shaft protection cap*

K

KD09 - Shrink disc

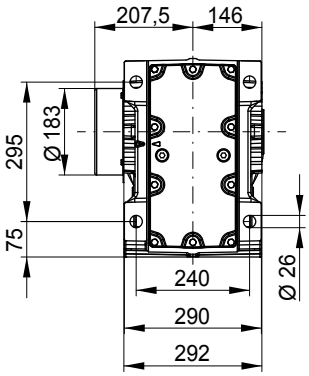

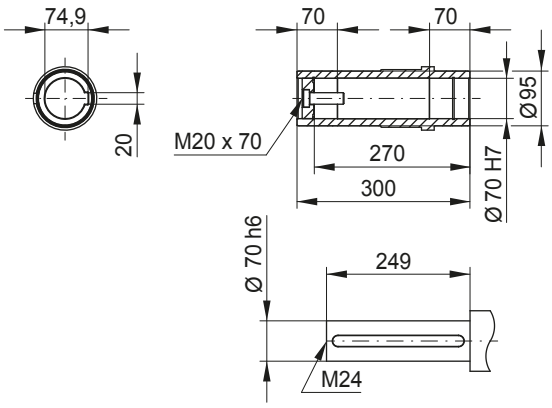

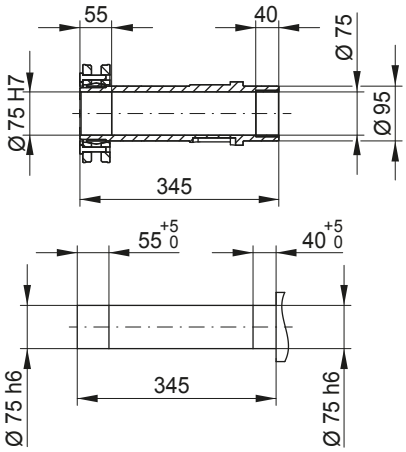

KS09 - Output shaft
KB09 - Output shaft on both sides

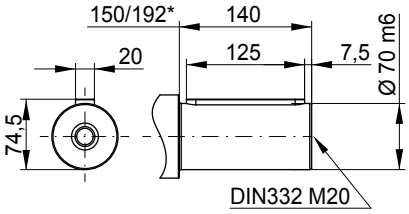

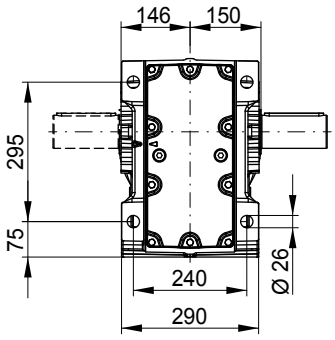

Motor fr. / Dimension	63	71	80	90S/L	100L	L100L	112M	132S,M	L132M	160M	160L	180M	180L	200L
AC	126	141	159	178	199	199	221	261	261	318	318	347	347	386
AD	128	136	145	155	165	165	185	205	205	266	266	281	281	317
k	642	676	684	726	776	814	786	851	889	973	1017	1041	1079	1170
kB	686	725	742	799	860	898	873	969	1007	1097	1141	1159	1197	1296
LB	204	238	246	288	338	376	348	413	451	535	579	603	641	732
LB1	248	287	304	361	422	460	435	531	569	659	703	721	759	858

Motor dimension sheets see page 266. Description of motor lengths LB and LB1 see page 270.

**Designs KS(KB)/KF*

KO09 - B5 flange execution with hollow shaft

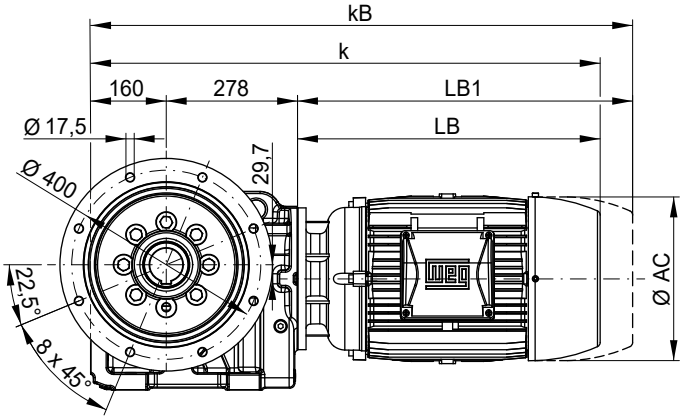

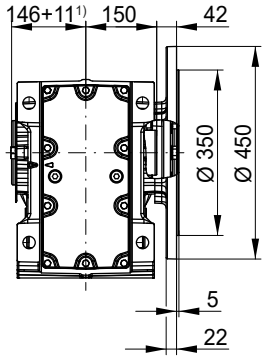

[1)] *incl. hollow shaft protection cap*

KF09 - B5 flange execution with output shaft

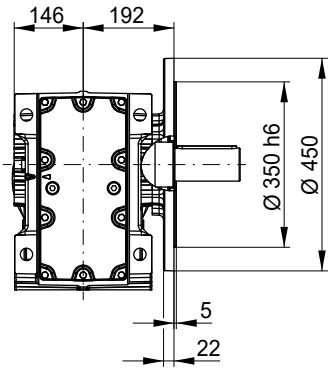

KP09 - B5 flange execution with hollow shaft and shrink disc

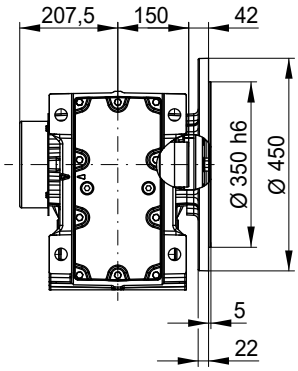

KT09 - Hollow shaft with torque arm **

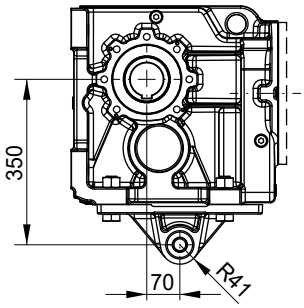

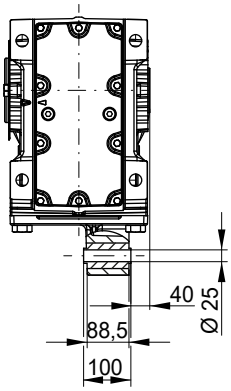

KU09 - Hollow shaft with shrink disc and torque arm **

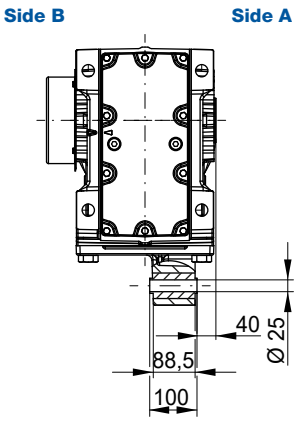

Dimensions in mm.

*** Torque arm may be mounted on side A or side B.*

Modular System Motor

Terminal box designs
page 272

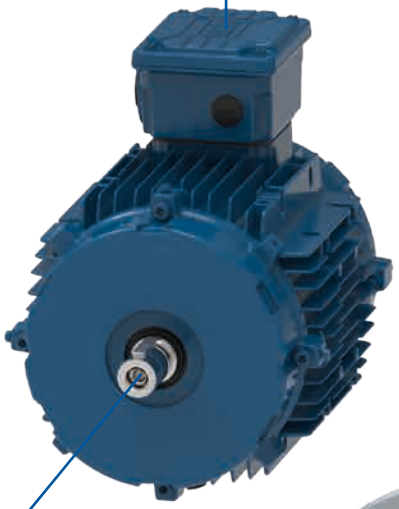

Brake systems
and back stops
page 275

Encoder systems
page 286

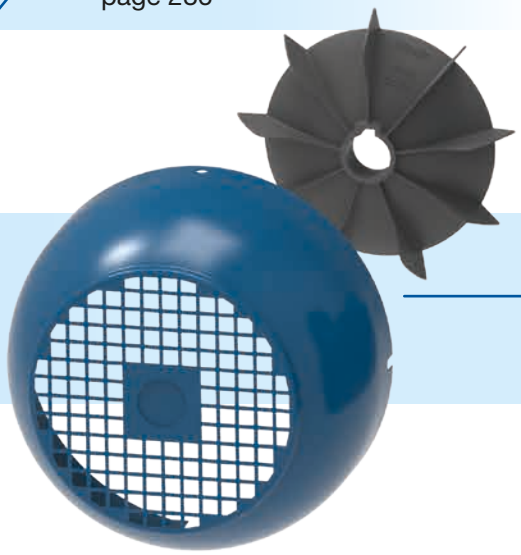

Ventilation systems
page 289

Motor series 11
with aluminium housing
(frame sizes 63 - 132)

Motor series 22
with cast iron housing
(frame sizes 160 - 200)

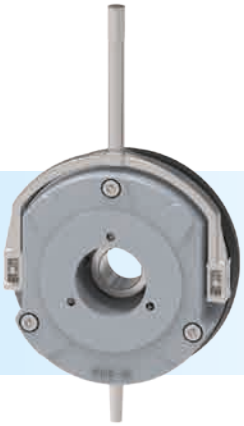

M

The modular motor system

Our motor system is an optimised and modularly designed kit. It includes harmonised modules like brakes, encoders, forced ventilation and connecting systems which are combined to the customer's requirements.
The significant advantage of this concept offers fast and reliable delivery times, not only to our local customers but also internationally, because WEG's competent sales network and assembling centres guarantee the availability of components worldwide.

Detailed description of the motor modules see from page 271.

The modular system motor

Due to special windings and clever connecting systems it's possible to use the same motor all over the world. Just a change of connection (4 possible options) and the motor can do its job reliably in Europe, USA or Far East, from 110 V to 690 V, 50 Hz and 60 Hz.

The modular system motor is available in two energy efficiency classes:
IE1: Series 11N, IEC frame sizes 63 to 80 (up to 0.55 kW)
IE3: Series 11P (aluminium), IEC sizes 80 to 132 (0.75 - 9.2 kW) and series 22P (cast iron), IEC sizes 160 and 200 (11-30 kW)
Motors in energy efficiency class IE4 on request

Advantages

- Wide voltage range
- Switchable to all usual voltages worldwide:
  110-480 V - 50/60 Hz up to and including frame size 100
  190-690 V - 50/60 Hz for frame sizes 112 to 200
- Frequency inverter operation 100/120 Hz
- Ambient temperature -20 to +40 °C
- Nameplate with 50/60 Hz data
- Flexible adjustment of the terminal box
- Reinforced bearings (integral motor)
- Shaft system for immediate assembling of motor modules, like encoders, brakes, back stop, etc.
- Standard degree of protection IP55
- Thermal protection with bimetal switch and/or PTC thermistor
- Thermal class F
- System motor, prepared for flexible assembling of motor modules
- Certified for worldwide distribution: CE, CSA, UL, EAC

M

The ideal motor for frequency inverter operation
Switchable to 100/120 Hz. Simply switch over and use the double output.
The excellent combination of the modular system motor and variable speed drives by WEG (type CFW for various applications and decentralised motor drive MW500) enables drive systems with wide speed range.

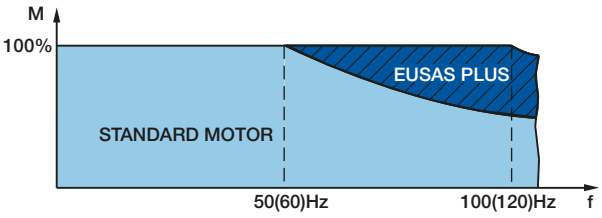

Rated torque up to double rated speed

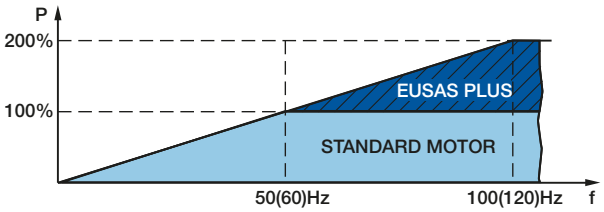

Two times rated power at double rated speed

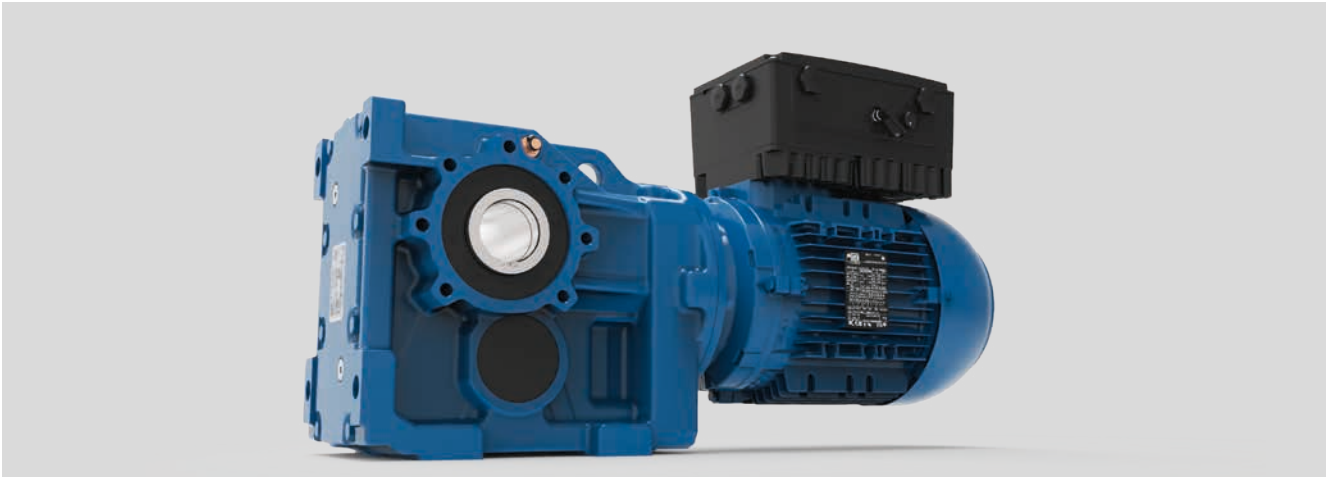

WG20 geared motor with decentralised motor drive MW500

Type code

11P-L100L-04F-TH-SH-K1-KB-MIP-BR..-SG-FL-SD

1 2 3 2 4 5 6 7 8 9 10 11 12 13 14

1	Motor series:	11N = Aluminium motor in energy efficiency class IE1, frame sizes 63 - 80 (up to 0.55 kW) 11P = Aluminium motor in energy efficiency class IE3, frame sizes 80 - 132 (0.75 - 9.2 kW) 22P = Cast iron motor in energy efficiency class IE3, frame sizes 160 - 200 (11 - 30 kW)
2	Stator length:	L. .S .S/L .M .L
3	IEC frame size:	63 71 80 90 100 112 132 160 180 200
4	Number of poles:	04 = 4 poles 06 = 6 poles
5	Power indicator:	D E F G
6	Temperature control:	see page 271
7	Anti-condensation heating:	see page 271
8	Climatic protection:	see page 272
9	Drain:	see page 272
10	Terminal box designs:	see page 272
11	Brake systems, back stop:	see page 275
12	Encoder systems:	see page 286
13	Ventilation systems:	see page 289
14	Additional modules:	see page 291

Options

1. Basic execution

Description	Key	Page	IEC frame size									
			63	71	80	90	100	112	132	160	180	200
Switchable voltage (4 connections)	-	254										
Temperature controller for switch off	TH	271										
PTC thermistor protection for switch off	TF	271										
Thermal class F (up to +155 °C)	-	253										
Fixed bearing NDE	-	-								-	-	-
Fixed bearing DE	-	-	-	-	-	-	-	-	-			
Degree of protection IP55	-	13										
Certifications (CE, EAC, UL, CSA)	-	-										

2. Electrical options

Description	Key	Page	IEC frame size									
			63	71	80	90	100	112	132	160	180	200
Special voltage SPECI-Volt	-	254										
Temperature controller for warning and switch off	2TH	271										
PTC thermistor protection for warning and switch off	2TF	271										
Temperature sensor KTY	KTY	271										
Temperature sensor Pt100	-	-										
Anti-condensation heating 230 V	SH	271	-									
Thermal class H (up to +180 °C)	-	-										

3. Mechanical options

Description	Key	Page	IEC frame size									
			63	71	80	90	100	112	132	160	180	200
Degree of protection IP56	-	13										
Degree of protection IP65	-	13										
Degree of protection IP66	-	13										
Degree of protection IP67	-	13										
Humidity protection K1	K1	272										
Corrosion protection K2	K2	272										
Drain	KB	272										
Multipin box	MIP	272										
Multi-plug-connect systems	MIG..	273										-
Non-ventilated without NDE shaft end	U	290										
Non-ventilated with NDE shaft end	UW	290										
Different position of the terminal box	-	-										
Relubrication	-	-	-	-	-	-	-	-	-			

Standard
Optional
Special execution (on request)
- Not available

M

4. Options - motor modules

Description	Key	Page	IEC frame size									
			63	71	80	90	100	112	132	160	180	200
Spring loaded brake - IP55, 24 V	BR..	279										
Spring loaded brake - IP55, 102 V	BR..	279										
Spring loaded brake - IP55, 195 V	BR..	279										
Double spring loaded brake in low noise execution	BBRHGD..	280	-									
Totally closed spring loaded brake - IP66	BRGH..	281	-									
Manual release for brake	(BR)H..	279	1)									
Locking device for manual release	(BR)HA..	279	1)									
Corrosion protection IP55 for brake	(BR)R..	279										
Dust protection IP65 for brake	(BR)S..	279	1)									
Corrosion and dust protection IP65 for brake	(BR)SR..	279	1)									
Brake in low noise execution	(BR)GD..	279	1)									
Micro switch	(BR)M	279	1)									
Anti-condensation heating for brakes	-	281	-	-								
Fast excitation rectifier	-	283										
Back stop KKM	KKM	285					-	-	-	-	-	-
Back stop RSM	RSM	285	-	-	-	-						
Encoder outside the fan cover	I.	286										
Encoder inside the fan cover	S.	286	-									
Encoder (1024 pulses, HTL/TTL, IP66)	.G	286	I. S.									
Mating plug for encoder without cable	-	-	I. S.									
Mating plug for encoder with cable	-	-	I. S.									
SINCOS encoder	.C	286										
Resolver	.R	287										
SSI multiturn encoder	.S	287										
Heavy Duty encoder	.V	287	-	-	-							
Special encoder	.A	287										
Forced ventilation (TEFV)	FL	289										
Fly wheel fan	ZL	290	-							-	-	-
Hand wheel	HR	291	-									
Protection cap	SD	291										
Protection cap for encoders	ID	291	-	-	-							
Second shaft end - module shaft	ZWM	292	-									
Second shaft end - solid shaft	ZWV	292										

1) not possible with 2 Nm brake

Standard
Optional
Special execution (on request)
- Not available

M

5. Additional options

Description	Key	Page	IEC frame size									
			63	71	80	90	100	112	132	160	180	200
Special nameplate (aluminium)	-	-										
Second nameplate (not fixed, aluminium or stainless steel)	-	-										
Metal fan	ZM	290	-									
Vibration severity grade "B" (reduced) according to DIN IEC 60034-14	-	254										
Wide range grease (-40 °C to +175 °C)	-	-										

Standard
Optional
Special execution (on request)
- Not available

General information

Frame size		63	71	80	90S/L	(L)100L	112M	(L)132M,S	160M,L	180M,L	200L
Mechanical features											
Mounting form		B14R							B5R		
Housing material		aluminium EN AC-46100							cast iron EN GJL-200		
Degree of protection		IP55									
Grounding		simple grounding - one inside the terminal box									
Cooling method		fan - IC411 (TEFC)									
Fan material		polypropylen									
Fan cover material		sheet steel									
Endshields material		aluminium EN AC-46100 *							cast iron EN GJL-200		
Drain		rubber drain plug									
Bearings	Locking	without bearing cap with circlip - NDE							without bearing cap with circlip - DE		
	DE	6203 ZZ	6204 ZZ	6205 ZZ	6305 ZZ	6207 ZZ	6307 ZZ	6309 ZZ	6309 ZZ-C3	6312 ZZ-C3	6314 ZZ-C3
	NDE	6201 ZZ	6203 ZZ	6203 ZZ	6205 ZZ	6206 ZZ	6206 ZZ	6308 ZZ	6209 ZZ-C3	6211 ZZ-C3	6212 ZZ-C3
Shaft seal	Type	radial shaft seal									
	DE	17x30x7	20x30x7	25x40x7	25x40x7	35x52x7	35x52x7	45x60x8	45x60x8	60x90x10	60x90x10
	NDE	12x22x7	17x28x5	17x28x5	25x35x7	30x40x4	30x40x4	40x56x8	45x62x7	55x70x8	60x75x8
	Material	NBR									
Lubrication	Type of grease	Mobil Polyrex EM									
	Grease fitting	without grease fitting									
Terminal block		9 poles									
Terminal box material		aluminium EN AC 47000							cast iron EN GJL-200		
Cable entry	Main	2 x M25x1.5					2 x M32x1.5		2 x M40x1.5		2 x M50x1,5
	Accessory	2 x M16x1.5									
	Plug	threaded plug for transport and storage; cable gland optional									
Shaft material		1.0511/1.1191 – C40/C45E – AISI 1040/45									
Direction of rotation		both directions									
Vibration		class A									
Nameplate material		stainless steel 1.4301 (AISI 304)									
Flange		FC-120					FC-160		FR-200 FR-250	FR-250	FR-300
Electrical features											
Power [kW] 4 poles		0.12 - 0.18	0.25 - 0.37	0.55 - 0.75	1.1 - 1.5	2.2 - 3.0	4.0	5.5 - 9.2	11.0 - 15.0	18.5 - 22	30
Power [kW] 6 poles		0.12	0.18 - 0.25	0.37 - 0.55	0.75	1.1 - 1.5	2.2	3.0 - 5.5	-	-	-
Design		N									
Voltage / Frequency		220-240 / 380-420 V (50Hz) // 220-277 / 380-480 V (60Hz)					380-420 / 660-690 V (50Hz) // 380-480 / 660V (60Hz)				
Winding	Impregnation	dip									
	Insulation class	F (DT 80K)									

** Except frame sizes L100L and L132M: endshield (NDE) made from cast iron EN GJL-200*

1. Voltage and frequency fluctuations

According to DIN EN 60034-1, a distinction is made between range A and range B (outside A) for voltage and frequency fluctuations. Range A and range B describe the permissible range in which frequency and voltage levels are permitted to deviate from the relevant measurement point (see illustration). The coordinate mean point "0" identifies the measurement point for the frequency and voltage in each case. The motor must be able to issue the rated torque in both ranges A and B.

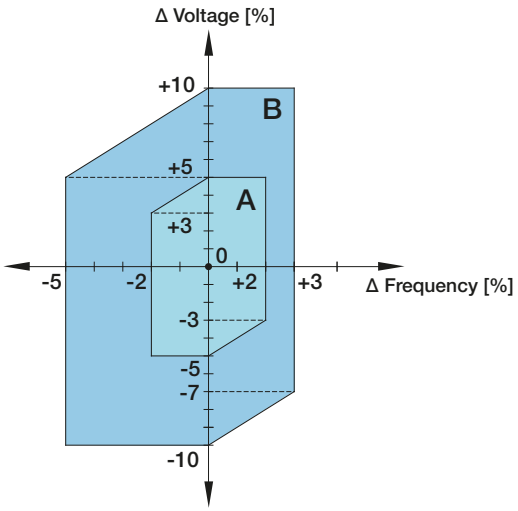

Ranges A and B according to DIN EN 60034-1

Range A

In continuous operation in range A, the characteristics are permitted to vary from the rated operation, and the heating at the limits of range A can be around 10 K higher.

Range B

The deviations from the characteristics are permitted to be greater than in range A, the heating levels can be higher than at the measurement point. Duration and frequency of operation in range B should be limited. Corrective measures, e.g. power reduction, should be provided. If a machine has multiple rated voltages or a rated voltage range, the permissible voltage and frequency fluctuations apply for each individual value of the rated voltage.

2. Modes of operation

Duty type according to DIN EN 60034-1 and VDE 0530-1.
The duty type is designated by the abbreviations S1 to S10. For the duty types S4, S5 and S7 the duty cycles/hour (c/h) and the factor of inertia F_I should also be stated at the bottom.
The factor of inertia F_I is the ratio of the total load moment of inertia (referred to the motor shaft) and the motor moment of inertia, to the motor moment of inertia, i.e.

$$F_I = \frac{\Sigma J_{ex.red} + J_{mot}}{J_{mot}}$$

	Definition	Example
S1	Continuous running duty with constant load	S1
S2	Short-time duty with constant load Duration of operation under rated conditions (recommended values: 10, 30, 60 or 90 min)	S2 10 min
S3	Intermittent periodic duty. Motor temperature not affected by starting operation Cyclic duration factor (recommended values: 15, 25, 40 or 60 %): Cycle duration (10 min unless otherwise stated)	S3 25 % 60 min
S4	Intermittent periodic duty. Motor temperature affected by starting operation Cyclic duration factor (recommended values: 15, 25, 40 or 60 %): Indication of the duty cycles per hour and of the factor of inertia F_I	S4 40 % 200, F_I=2
S5	Intermittent periodic duty. Motor temperature affected by starting operation and electric braking Cyclic duration factor (recommended values: 15, 25, 40 or 60 %): Indication of the duty cycles per hour and of the factor of inertia F_I	S5 15 % 300, F_I=1
S6	Continuous operation periodic duty. Cyclic duration factor (recommended values: 15, 25, 40 or 60 %): Cycle duration (10 min unless otherwise stated)	S6 25 % 60 min
S7	Continuous operation with starting and electric braking Indication of the duty cycles per hour and of the factor of inertia F_I	S7 200, F_I=1
S8	Continuous operation with related load/speed changes (Sequence of similar cycles) Speeds during the duty cycle Periods for which these speeds are maintained during the duty cycle Indication of the factor of inertia F_I	S8 3000^{min-1}, 10 min 1500^{min-1}, 15 min F_I=1.5
S9	Continuous operation duty with unrelated load/speed changes	S9
S10	Duty with discrete constant loads and speed	S10 F_I=0.6

Legend see page 282.

3. Rated power according to VDE 0530-1

The listed rated power of the motor corresponds to the output power according to VDE 0530-1 for continuous operation S1, frequency 50/60 Hz, max. ambient temperature +40 °C, max. altitude 1000 m above sea level.
According to this standard at rated values (voltage and frequency) the motors may be overloaded for two minutes by 1.5 times the rated current, without damage of the winding.
The motors are calculated by rated values according to thermal class B, but produced in class F and by operation with rated values fit for higher loads:

a. At rated power and rated voltage the ambient temperature may be increased from +40 °C to +60 °C.

b. Provided that ambient temperature does not exceed +40 °C, the normal capacity in continuous operation can be increased by appr. 10 %.

All technical data stated applies to rated frequency of 50 Hz and supply voltage of 400 V rated voltage at rated power.If the load changes, the stated values will deviate to higher or lower.

4. Nameplate

The stainless steel plate is fixed on the frame and bears data for 50 Hz and 60 Hz. The information on the nameplate contains all relevant specifications of the product (see examples for motor frame sizes 90, 132 and 160).

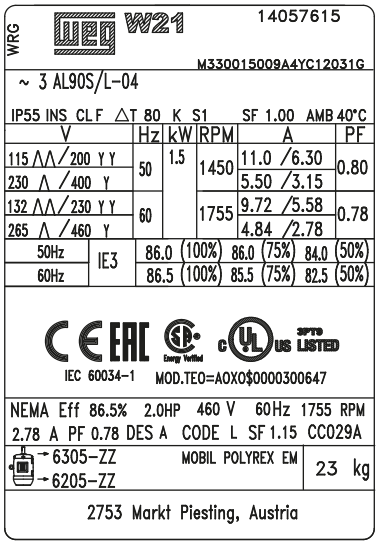

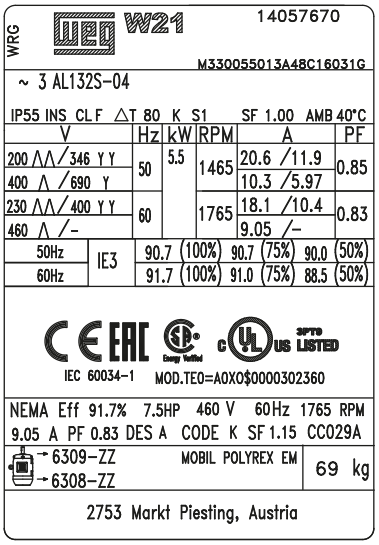

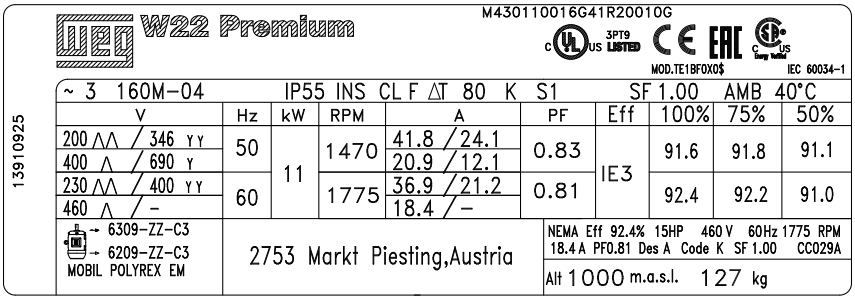

5. Torque

The motors are fitted with squirrel-cage rotors suitable for direct online starting. The values of starting torque and break-down torque, expressed as a multiple of the rated torque, are given in the performance data. A deviation in the voltage from rated value changes the torques as an approximate function of the square of the voltages.

6. Efficiency class

Standard IEC 60034-30 defines uniform efficiency classes, valid for 2, 4, 6 and 8 pole asynchronous motors (50/60 Hz) with output powers of 0.12 kW to 1,000 kW. This standard divides 3-phase induction motors with cage rotor in efficiency classes IE1=standard efficiency, IE2=high efficiency and IE3=premium efficiency. Our motors are labelled with efficiency class and factor on the nameplate.

7. Motor protection

The correct selection of protective equipment determines essen-tially the operation reliability and service life of motors. Current dependent protection and thermal protective devices are available. Fuses do not protect the motor against over-loads, they only protect the supply cables or switchboards against short circuits.

8. Overload protection (protection relay)

It is recommended to use starters with thermal overload pro-tection. The overloads should be adjusted to the rated current shown on the nameplate. Thermal protective devices (thermistors in windings) see page 271.

9. Speed and rotation direction

The rated speed is valid for the rated dates (voltage, frequency). The synchronous speed depends on the line frequency.
The motors are able for operation in both directions. By connection of U1, V1, W1 to L1, L2, L3 the rotation will be to the right if you look at the shaft from the driveside. Left direction can be easily made by changing of two wires.

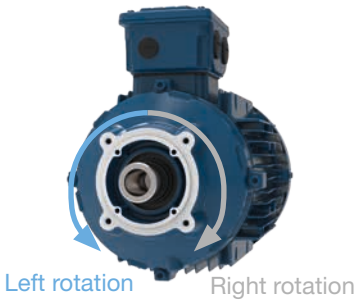

Rotation direction

10. Cable entry

For all frames, the terminal box can be rotated in 90° increments. Terminal boxes are not delivered with cable glands in standard. Motors are supplied with plastic threaded plugs in the cable entries to maintain the degree of protection during transport and storage. In order to guarantee the degree of protection, cable entries must comply with at least the same degree of protection indicated on the motor nameplate.

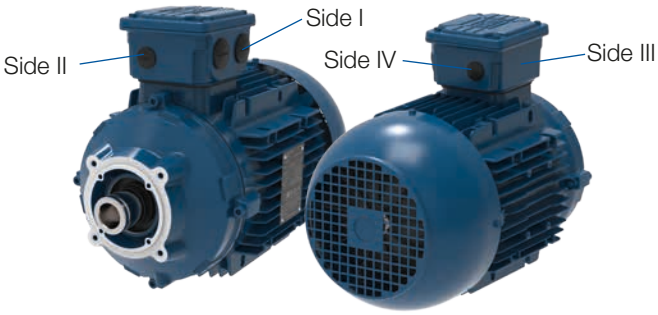

Side designation for cable entries

11. Cooling

The motors are totally enclosed fan cooled (TEFC) by means of external surface ventilation (IC411), as per IEC 60034-6). Maximum ambient temperature +40 °C. Please check the minimum distance “Y” (see dimension sheets from page 266) between cover and wall by mounting the motor.

- **Integral fans (TEFC, IC411)**

Particular attention has been dedicated to the shape in order to reduce noise and improve the efficiency of the motor. Radial construction has been selected to allow rotation in both directions.

- **Fan cover**

In treated steel plate, properly profiled to improve efficiency and reduce the noise produced by the fan.

- **Forced ventilation (TEFV, IC416) see also page 289**

For special operating conditions, e.g. increased permissible number of operations per hour or variable speed operation, the motors of IEC sizes 63 to 200 can be supplied with forced ventilation by means of a separately fitted fan motor.

12. Insulation

The motors in this catalogue comply with the requirements of thermal class F. All windings are impregnated with var-nish with a high mechanical strength. The maximum temperature of the insulation is, according to thermal class F, at +155 °C. The motors are utilised at rated values according to thermal class B (+130 °C). Copper wire insulation and the impregnation varnish have a temperature index class F and therefore there is a large margin of safety in addition to high overload capacity.
Motors from frame size 160 are equipped with the WISE® insulation system of the new W22 motor range by WEG.

13. Noise levels

Noise measurements were taken in accordance with standard IEC 60034-9 (see table to the right).

Frame size	Noise level - dB(A), Distance: 1 meter			
	50 Hz		60 Hz	
	4p	6p	4p	6p
63	44	43	48	47
71	43	43	47	47
80	44	43	48	47
90	49	45	51	49
100	53	44	54	53
112	56	52	56	52
132	56	53	58	55
160	61	56	64	59
180	61	56	64	59
200	63	60	66	62

14. Balancing of rotors

Motors comply with vibration strength level "A" according to standard IEC 60034-14. On request, motors may also be balanced according to level "B".

15. Shaft ends

Shaft ends of motors in frame sizes 63 up to 132 are equipped with a conical bore and do not have a key, while the frame sizes 160 to 200 have a shaft with closed end keyway. On the non-driven side, modular motors have a system shaft to mount motor modules, such as brakes, encoders, back stops, etc.

16. Voltage, current and frequency

In standard execution the motors are delivered with following rated voltages: see Chapter 17 Electrical connection (basic connection).

Special voltages

Motors for special voltages and/or frequencies are available on request.

Speed and connection

Tolerance of the motor speed according to IEC 60034. Terminal board connection see page 255.

Connection

- **Direct connection**

The starting torque in direct connection amounts to 160 to 330 % of the rated torque, depending on power and number of poles. The starting current is about 2.5 to 8 times of the rated current.

- **Star-delta starting**

The star-delta (Y-D) starting is an easy way to reduce the starting current and starting torque. Motors can be started with this starting method whenever the supply voltage corresponds to the rated voltage of the motors in delta connections. Up from frame size 112 the standard modular motors are supplied with windings designed for this starting method (e.g. 400 V D / 690 V Y). A Y-D-starting is only possible with delta service connection (this shall be considered when selecting a motor!), as the motor is first Y-connected and is changed over to D-connection after the run-up phase. At Y-D-starting, the starting currents and torques will be reduced to about 1/3 of the values produced in case of direct-online starting. Attention should be paid to the fact that a current impulse is produced when changing over to D-connection.

17. Electrical connection

Rated voltages for motor series 11N, 11P (IEC frame sizes 63 to 100)					
Possible connection		Rated power P_N	Increased rated power 1,2 x P_N	Frequency inverter operation	
Δ	Delta	220 - **230** - 240 V at 50 Hz 220 - **265** - 277 V at 60 Hz	- 254 - 265 - 277 V at 60 Hz	Δ	400 V, 87 Hz
ΔΔ	Delta - Delta	110 - **115** - 120 V at 50 Hz 110 - **132** - 138 V at 60 Hz	- 127 - 132 - 138 V at 60 Hz	ΔΔ	230 V, 100 Hz
Y	Star (basic connection)	380 - **400** - 420 V at 50 Hz 380 - **460** - 480 V at 60 Hz	- 440 - 460 - 480 V at 60 Hz	YY	400 V, 100 Hz
YY	Star - Star	190 - **200** - 210 V at 50 Hz 190 - **230** - 240 V at 60 Hz	- 220 - 230 - 240 V at 60 Hz	YY	460 V, 120 Hz

Rated voltages for motor series 11P and 22P (IEC frame sizes 112 to 200)					
Possible connection		Rated power P_N	Increased rated power 1,2 x P_N	Frequency inverter operation	
Δ	Delta (basic connection)	380 - **400** - 420 V at 50 Hz 380 - **460** - 480 V at 60 Hz	- 440 - 460 - 480 V at 60 Hz	ΔΔ	400 V, 100 Hz
ΔΔ	Delta - Delta	190 - **200** - 210 V at 50 Hz 190 - **230** - 240 V at 60 Hz	- 220 - 230 - 240 V at 60 Hz		
Y	Star	660 - **690** - (730) V at 50 Hz 660 - **(796)** - (830) V at 60 Hz	- (760) - (796) V at 60 Hz	ΔΔ	460 V, 120 Hz
YY	Star - Star	330 - **346** - 365 V at 50 Hz 330 - **400** - 415 V at 60 Hz	- 380 - 400 - 415 V at 60 Hz		

Terminal board connection

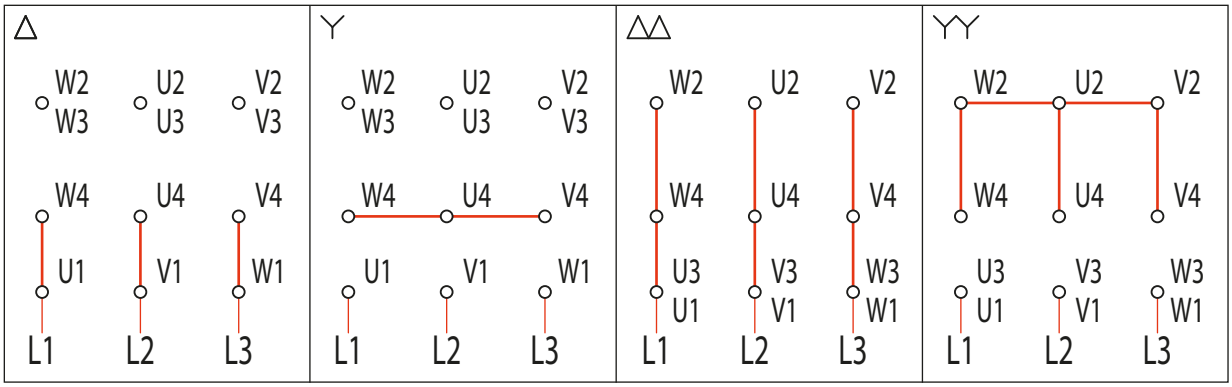

18. Variable speed drive application

The stator windings of the motors are wound with class F insulation (class H optional) and are suitable for either DOL starting or - regarding the limits shown in the tabel below - via a variable speed drive.

Rated voltage				
220-240/380-415 V (50 Hz) 400-460 V (60 Hz)				
Motor rated voltage	Voltage spikes	dV/dt *	Rise time *	Time between pulses
	At motor terminals (phase-phase)	At motor terminals (phase-phase)		
V_{rated} < 460 V	≤ 1600 V	≤ 5200 V/µs	≥ 0.1 µs	≥ 6 µs
460 V ≤ V_{rated} < 575 V	≤ 2000 V	≤ 6500 V/µs		
575 V ≤ V_{rated} ≤ 1000 V	≤ 2400 V	≤ 7800 V/µs		

** dV/dt and rise time definition according to NEMA MG1 - part 30*

Notes:

- In order to protect the motor insulation system, the maximum recommended switching frequency is 5 kHz.
- If one or more of the above conditions is not attended, a filter (load reactor or dV/dt filter) must be installed in the output of the VSD.
- General purpose motors with rated voltage greater than 575 V, which at the time of purchase did not have any indication of operation with VSD, are able to withstand the electrical limits set in the table above for rated voltage up to 575 V. If such conditions are not fully satisfied, output filters must be used.
- General purpose motors of the dual voltage type, for example 400/690 V or 380/660 V, which at the time of purchase did not have any indication of operation with VSD, are able to be driven by a VSD in the higher voltage only if the limits set in the table above for rated voltage up to 460 V are fully attended in the application. Otherwise, a load reactor or a dV/dt filter must be installed in the VSD output.

M

Electrical basic data

Notes for electrical basic data

The technical data according to selection tables (starting current, torques, power factor, etc.) are valid for the rated values, that means for the rated voltage and rated frequency.
If the motors are running on higher or lower voltage within the wide range voltage, the stator winding will be utilised according to thermal class F. In these cases a power increase in accordance to a. and b. on page 252 is not possible.
The design of the wide range winding permits supply voltage deviations in the indicated wide range voltage of ± 5 % without reduction of the power.

			1	2	3					4	5	6			7	8	9	10	11	12
Series	IEC frame size	Type	P_N [kW]	n_N [min^{-1}]	I_N at 115 V [A]	I_N at 200 V [A]	I_N at 230 V [A]	I_N at 400 V [A]	I_N at 690 V [A]	I_A/I_N	IE class	η 4/4 [%]	η 3/4 [%]	η 1/2 [%]	cosφ	M_N [Nm]	M_A/M_N	M_K/M_N	J_{mot} [kgm^2]	m [kg]

																	13	14	15
										Frequency inverter operation							Brake		
Type	P_N	at 380 V			at 420 V			400 V / 87 Hz			400 V / 100 Hz			M_B	J_B	m
		I_N	M_A/M_N	M_K/M_N	I_N	M_A/M_N	M_K/M_N	P_N	n_N	I_N	P_N	n_N	I_N		x10^{-3}	
	[kW]	[A]			[A]			[kW]	[min^{-1}]	[A]	[kW]	[min^{-1}]	[A]	[Nm]	[kgm^2]	[kg]

M

1 P_N = Rated power

2 n_N = Rated speed

3 I_N = Rated current

4 I_A/I_N = Ratio of starting current to rated current

5 IE class = Efficiency class

6 η 4/4 (3/4, 1/2) = Efficiency at rated power

7 cosφ = Power factor

8 M_N = Rated torque

9 M_A/M_N = Ratio of starting torque to rated torque

10 M_K/M_N = Ratio of sweeping torque to rated torque

11 J_{mot} = Motor moment of inertia

12 m = Weight of the motor

13 M_B = Braking torque

14 J_B = Brake moment of inertia

15 m = Weight of the motor brake

4 poles, 1500 min^{-1}, 50 Hz

Series	IEC frame size	Type	P_N [kW]	n_N [min^{-1}]	I_N at 115 V [A]	I_N at 200 V [A]	I_N at 230 V [A]	I_N at 400 V [A]	I_N at 690 V [A]	$\frac{I_A}{I_N}$	IE class	η 4/4 [%]	η 3/4 [%]	η 1/2 [%]	cosφ	M_N [Nm]	$\frac{M_A}{M_N}$	$\frac{M_K}{M_N}$	J_{mot} [kgm^2]	m [kg]
11N	63	11N-63-04E	0.12	1375	1.7	0.97	0.85	0.49	-	3.5	IE1	51.0	47.0	43.0	0.70	0.83	2.0	2.2	0.00034	6.0
		11N-63-04F	0.18	1370	2.2	1.2	1.1	0.62	-	3.4	IE1	58.0	54.0	46.0	0.72	1.3	2.0	2.2	0.00039	6.0
	71	11N-71-04E	0.25	1370	2.9	1.7	1.4	0.83	-	3.5	IE1	61.5	58.0	53.0	0.71	1.8	1.9	2.1	0.00039	7.0
		11N-71-04F	0.37	1365	3.7	2.1	1.8	1.1	-	3.7	IE1	66.0	62.0	58.0	0.76	2.7	2.0	2.0	0.00056	8.0
	80	11N-80-04E	0.55	1415	4.9	2.8	2.5	1.4	-	4.7	IE1	70.0	68.0	63.0	0.80	3.7	2.1	2.2	0.0019	10
11P	80	11P-80-04F	0.75	1420	5.6	3.2	2.8	1.6	-	6.7	IE3	82.5	82.0	80.0	0.81	5.1	3.0	3.3	0.0032	12
	90	11P-90S/L-04E	1.1	1455	8.4	4.8	4.2	2.4	-	7.6	IE3	84.8	84.5	83.0	0.78	7.3	2.5	3.3	0.0055	16
		11P-90S/L-04F	1.5	1450	11.0	6.3	5.5	3.2	-	7.4	IE3	86.0	86.0	84.0	0.80	9.9	2.6	3.4	0.0066	18
	100	11P-100L-04E	2.2	1435	16.1	9.2	8.1	4.6	-	7.4	IE3	87.0	87.0	86.5	0.79	14.6	3.2	3.5	0.0090	32
		11P-L100L-04F	3.0	1440	22	12.6	10.9	6.3	-	7.8	IE3	88.0	88.0	87.0	0.78	19.9	3.5	3.7	0.0120	39
	112	11P-112M-04E	4.0	1450	-	16.4	-	8.2	4.8	7.0	IE3	89.1	89.1	88.7	0.79	27	2.3	3.1	0.0182	37
	132	11P-132S-04E	5.5	1465	-	21	-	10.3	6.0	8.5	IE3	90.7	90.7	90.0	0.85	36	2.4	3.4	0.0528	56
		11P-L132M-04F	7.5	1465	-	28	-	14.2	8.2	8.5	IE3	90.6	90.0	87.5	0.84	49	2.5	3.4	0.0642	70
		11P-L132M-04G	9.2	1460		35		17.4	10.1	8.5	IE3	91.0	91.0	90.1	0.84	60	2.5	3.3	0.0730	75
22P	160	22P-160M-04E	11.0	1470	-	42	-	21	12.1	7.5	IE3	91.6	91.8	91.1	0.83	72	2.8	3.2	0.119	128
		22P-160L-04F	15.0	1465	-	56	-	28	16.2	7.2	IE3	92.3	92.5	92.2	0.84	98	2.8	3.1	0.153	151
	180	22P-180M-04E	18.5	1470	-	70	-	35	20	7.4	IE3	92.8	92.8	92.2	0.82	121	3.0	3.2	0.174	176
		22P-180L-04F	22	1470	-	82	-	41	24	7.3	IE3	93.2	93.0	92.3	0.83	143	3.4	3.4	0.210	198
	200	22P-200L-04E	30	1480	-	114	-	57	33	7.5	IE3	93.7	93.6	92.9	0.81	193	2.8	3.1	0.320	259

Legend see page 257

4 poles, 1500 min^{-1}, 50 Hz

Type	P_N	at 380 V			at 420 V			Frequency inverter operation 400 V / 87 Hz			Frequency inverter operation 400 V / 100 Hz			Brake		
		I_N	M_A/M_N	M_K/M_N	I_N	M_A/M_N	M_K/M_N	P_N	n_N	I_N	P_N	n_N	I_N	M_B	J_B	m
	[kW]	[A]			[A]			[kW]	[min^{-1}]	[A]	[kW]	[min^{-1}]	[A]	[Nm]	x10^{-3} [kgm^2]	[kg]
11N-63-04E	0.12	0.50	1.8	2.0	0.52	2.2	2.3	0.21	2393	0.89	0.24	2750	1.0	2 5	0.015 0.015	1.1 1.1
11N-63-04F	0.18	0.60	1.8	1.9	0.66	2.2	2.3	0.31	2384	1.1	0.36	2740	1.3			
11N-71-04E	0.25	0.85	1.7	1.8	0.90	2.0	2.0	0.44	2384	1.5	0.50	2740	1.7	5 2	0.015 0.015	1.1 1.1
11N-71-04F	0.37	1.2	1.8	1.8	1.3	2.3	2.3	0.64	2375	1.9	0.74	2730	2.2			
11N-80-04E	0.55	1.4	1.8	2.0	1.4	2.3	2.4	0.96	2462	2.6	1.1	2830	3.0	10 5	0.045 0.015	1.9 1.1
11P-80-04F	0.75	1.7	2.7	2.9	1.6	3.3	3.6	1.3	2471	3.0	1.5	2840	3.4			
11P-90S/L-04E	1.1	2.4	2.2	2.9	2.3	2.7	3.6	1.9	2532	4.4	2.2	2910	5.0	20 10	0.173 0.045	3.1 1.9
11P-90S/L-04F	1.5	3.2	2.3	3.0	3.2	2.8	3.7	2.6	2523	5.8	3.0	2900	6.6			
11P-100L-04E	2.2	4.7	2.8	3.0	4.5	3.5	3.8	3.8	2497	8.5	4.4	2870	9.7	40 20	0.45 0.173	4.6 3.1
11P-L100L-04F	3.0	6.3	3.1	3.3	6.1	3.8	4.0	5.2	2506	11.5	6.0	2880	13.2			
11P-112M-04E	4.0	8.0	2.0	2.7	8.0	2.6	3.4	-	-	-	8.0	2900	17.2	60 40	0.86 0.45	6.3 4.6
11P-132S-04E	5.5	10.6	2.1	3.0	10.2	2.6	3.7	-	-	-	11.0	2930	22	100 60	1.22 0.86	10.0 6.3
11P-L132M-04F	7.5	14.4	2.2	3.0	13.5	2.8	3.7	-	-	-	15.0	2930	30			
11P-L132M-04G	9.2	18.3	2.2	2.9	17.5	2.7	3.6	-	-	-	18.4	2920	36			
22P-160M-04E	11.0	22	2.3	2.8	21	2.9	3.6	-	-	-	22	2940	44	150 100	2.85 6.65	14.7 10.0
22P-160L-04F	15.0	29	2.2	2.6	28	2.8	3.4	-	-	-	30	2930	59			
22P-180M-04E	18.5	36	2.5	2.8	35	3.2	3.5	-	-	-	37	2940	74	250 150	6.65 2.85	21.5 14.7
22P-180L-04F	22	43	2.7	2.9	41	3.4	3.7	-	-	-	44	2940	86			
22P-200L-04E	30	59	2.4	2.7	57	3.1	3.5	-	-	-	60	2960	120	400 250	19.5 6.65	35 21.5

Legend see page 257

4 poles, 1800 min^{-1}, 60 Hz

Series	IEC frame size	Type	P_N [kW]	n_N [min^{-1}]	I_N at 132 V [A]	I_N at 230 V [A]	I_N at 400 V [A]	I_N at 265 V [A]	I_N at 460 V [A]	$\frac{I_A}{I_N}$	IE class	η 4/4 [%]	η 3/4 [%]	η 1/2 [%]	cosφ	M_N [Nm]	$\frac{M_A}{M_N}$	$\frac{M_K}{M_N}$	J_{mot} [kgm^2]	m [kg]
11N	63	11N-63-04E	0.12	1695	1.5	0.88	0.51	0.77	0.44	3.6	IE1	62.0	55.0	42.0	0.55	0.68	2.5	2.7	0.00034	6.0
		11N-63-04F	0.18	1700	1.9	1.1	0.63	0.94	0.54	3.6	IE1	66.0	55.7	47.5	0.66	1.0	2.6	2.7	0.00039	6.0
	71	11N-71-04E	0.25	1700	2.4	1.4	0.80	1.2	0.69	3.7	IE1	68.0	65.0	55.0	0.67	1.5	2.1	2.2	0.00039	7.0
		11N-71-04F	0.37	1685	3.5	2.0	1.2	1.8	1.0	3.9	IE1	70.0	64.0	58.2	0.66	2.1	2.7	2.7	0.00056	8.0
	80	11N-80-04E	0.55	1725	4.3	2.5	1.4	2.1	1.2	5.0	IE1	74.0	71.0	64.9	0.76	3.1	2.5	2.8	0.0019	10
11P	80	11P-80-04F	0.75	1720	5.0	2.9	1.7	2.5	1.4	7.4	IE3	84.0	80.0	78.5	0.79	4.2	3.7	4.2	0.0032	12
	90	11P-90S/L-04E	1.1	1760	7.3	4.2	2.4	3.7	2.1	8.5	IE3	86.5	84.0	80.0	0.76	6.0	2.9	3.9	0.0055	16
		11P-90S/L-04F	1.5	1755	9.7	5.6	3.2	4.8	2.8	8.3	IE3	86.5	85.5	82.5	0.78	8.2	3.0	4.0	0.0066	18
	100	11P-100L-04E	2.2	1745	14.0	8.0	4.6	7.0	4.0	8.3	IE3	89.5	88.5	88.0	0.77	12.1	4.1	4.4	0.0090	32
		11P-L100L-04F	3.0	1740	19.0	10.9	6.3	9.5	5.4	8.6	IE3	89.5	86.5	84.0	0.77	16.5	4.6	4.8	0.0120	39
	112	11P-112M-04E	4.0	1755	-	14.6	8.4	-	7.3	8.0	IE3	89.5	89.5	87.5	0.77	22	2.5	3.5	0.0182	37
	132	11P-132S-04E	5.5	1765	-	18.1	10.4	-	9.1	8.9	IE3	91.7	91.0	88.5	0.83	30	2.6	4.3	0.0528	56
		11P-L132M-04F	7.5	1770	-	25	14.3	-	12.4	9.0	IE3	91.7	91.5	91.0	0.83	41	2.7	4.3	0.0642	70
		11P-L132M-04G	9.2	1765		31	17.7		15.4	9.0	IE3	91.7	91.5	90.4	0.82	49	2.6	3.8	0.0730	75
22P	160	22P-160M-04E	11.0	1775	-	37	21	-	18.4	8.2	IE3	92.4	92.2	91.0	0.81	59	3.0	3.7	0.1190	128
		22P-160L-04F	15.0	1775	-	49	28	-	25	7.6	IE3	93.0	92.9	92.0	0.82	81	2.9	3.5	0.1530	151
	180	22P-180M-04E	18.5	1775	-	61	35	-	31	7.7	IE3	93.6	93.0	92.0	0.81	100	3.1	3.6	0.1740	176
		22P-180L-04F	22	1775	-	72	41	-	36	8.5	IE3	93.6	93.2	92.1	0.82	119	3.5	3.8	0.2100	198
	200	22P-200L-04E	30	1780	-	100	58	-	50	8.3	IE3	94.1	93.7	92.6	0.80	161	2.9	3.5	0.3200	259

Legend see page 257

4 poles, 1800 min^{-1}, 60 Hz

Type	P_N	at 380 V			at 420 V			at 440 V			at 480 V			Frequency inverter operation 460 V / 105 Hz			Frequency inverter operation 460 V / 120 Hz			Brake		
		I_N	M_A/M_N	M_K/M_N	I_N	M_A/M_N	M_K/M_N	I_N	M_A/M_N	M_K/M_N	I_N	M_A/M_N	M_K/M_N	P_N	n_N	I_N	P_N	n_N	I_N	M_B	J_B	m
	[kW]	[A]			[A]			[A]			[A]			[kW]	[min^{-1}]	[A]	[kW]	[min^{-1}]	[A]	[Nm]	x10^{-3} [kgm^2]	[kg]
11N-63-04E	0.12	0.50	2.3	2.5	0.53	2.8	2.8	0.48	2.3	2.5	0.44	2.7	3.0	0.21	2966	0.80	0.24	3390	0.93	2 5	0.015 0.015	1.1 1.1
11N-63-04F	0.18	0.61	2.3	2.3	0.67	2.9	2.8	0.56	2.3	2.3	0.61	2.8	3.0	0.32	2975	0.99	0.36	3400	1.1			
11N-71-04E	0.25	0.82	1.9	1.9	0.87	2.2	2.1	0.87	1.9	1.9	0.89	2.2	2.4	0.44	2975	1.3	0.50	3400	1.5	5 2	0.015 0.015	1.1 1.1
11N-71-04F	0.37	1.3	2.4	2.4	1.4	3.1	3.1	1.1	2.4	2.4	1.2	2.9	2.9	0.65	2949	1.8	0.74	3370	2.1			
11N-80-04E	0.55	1.4	2.1	2.5	1.4	2.7	3.1	1.3	2.1	2.5	1.4	2.7	3.1	0.96	3019	2.2	1.1	3450	2.6	10 5	0.045 0.015	1.9 1.1
11P-80-04F	0.75	1.7	3.3	3.7	1.6	4.1	4.6	1.5	3.3	3.7	1.4	4.0	4.6	1.3	3010	2.6	1.5	3440	3.0			
11P-90S/L-04E	1.1	2.4	2.6	3.4	2.4	3.1	4.3	2.1	2.6	3.4	2.1	3.2	4.4	1.9	3080	3.8	2.2	3520	4.4	20 10	0.173 0.045	3.1 1.9
11P-90S/L-04F	1.5	3.3	2.7	3.5	3.2	3.2	4.4	2.8	2.7	3.5	2.8	3.4	4.5	2.6	3071	5.1	3.0	3510	5.9			
11P-100L-04E	2.2	4.7	3.6	3.8	4.5	4.5	4.8	4.0	3.7	4.0	3.9	4.0	4.5	3.9	3054	7.3	4.4	3490	8.4	40 20	0.45 0.173	4.6 3.1
11P-L100L-04F	3.0	6.3	4.1	4.3	6.1	5.0	5.2	5.4	4.2	4.4	5.3	4.5	4.8	5.3	3045	9.9	6.0	3480	11.5			
11P-112M-04E	4.0	8.2	2.2	3.0	8.2	2.8	3.8	7.1	2.2	3.0	6.9	2.9	3.9	-	-	-	8.0	3510	15.3	60 40	0.86 0.45	6.3 4.6
11P-132S-04E	5.5	10.7	2.3	3.8	10.3	2.8	4.7	9.2	2.3	3.8	9.0	2.9	4.4	-	-	-	11.0	3530	19.0	100 60	1.22 0.86	10.0 6.3
11P-L132M-04F	7.5	14.5	2.4	3.8	13.6	3.0	4.7	12.5	2.4	3.8	11.9	3.1	4.3	-	-	-	15.0	3540	26			
11P-L132M-04G	9.2	17.8	1.7	2.5	16.3	2.1	3.1	15.8	2.3	3.3	15.4	2.8	4.2				18.4	3530	32			
22P-160M-04E	11.0	22	2.5	3.2	21	3.1	4.2	18.8	2.5	3.2	18.1	3.3	4.0	-	-	-	22	3550	39	150 100	2.85 6.65	14.7 10.0
22P-160L-04F	15.0	30	2.3	2.9	28	2.9	3.8	26	2.3	2.9	25	3.2	3.9	-	-	-	30	3550	52			
22P-180M-04E	18.5	36	2.6	3.2	35	3.3	3.9	31	2.6	3.2	31	4.0	4.1	-	-	-	37	3550	64	250 150	6.65 2.85	21.5 14.7
22P-180L-04F	22	43	2.8	3.2	42	3.5	4.1	37	2.8	3.2	36	4.2	4.4	-	-	-	44	3550	76			
22P-200L-04E	30	59	2.5	3.0	58	3.2	4.0	51	2.5	3.0	51	3.5	3.9	-	-	-	60	3560	105	400 250	19.5 6.65	35 21.5

Legend see page 257

6 poles, 1000 min^{-1}, 50 Hz

Series	IEC frame size	Type	P_N [kW]	n_N [min^{-1}]	I_N at 115 V [A]	I_N at 200 V [A]	I_N at 230 V [A]	I_N at 400 V [A]	I_N at 690 V [A]	$\frac{I_A}{I_N}$	IE class	η 4/4 [%]	η 3/4 [%]	η 1/2 [%]	cosφ	M_N [Nm]	$\frac{M_A}{M_N}$	$\frac{M_K}{M_N}$	J_{mot} [kgm^2]	m [kg]
11N	63	11N-63-06F	0.12	890	1.9	1.1	0.94	0.54	-	2.6	IE1	48.0	47.0	43.0	0.67	1.3	1.7	1.6	0.00051	6.0
	71	11N-71-06E	0.18	895	2.9	1.7	1.5	0.83	-	3.3	IE1	54.0	52.0	48.0	0.58	1.9	2.0	2.2	0.00077	9.0
		11N-71-06F	0.25	900	3.8	2.2	1.9	1.1	-	3.5	IE1	57.5	57.0	56.5	0.57	2.7	2.2	2.2	0.00093	9.0
	80	11N-80-06E	0.37	920	4.1	2.4	2.1	1.2	-	3.6	IE1	62.0	60.0	55.0	0.73	3.9	1.7	1.7	0.00190	11
		11N-80-06F	0.55	930	5.6	3.2	2.8	1.6	-	4.0	IE1	65.8	63.0	57.0	0.76	5.7	1.8	1.8	0.00304	11
11P	90	11P-90S/L-06E	0.75	940	6.7	3.9	3.4	1.9	-	5.2	IE3	79.0	79.0	76.5	0.71	7.8	2.5	2.8	0.00658	19
	100	11P-100L-06D	1.1	945	9.4	5.4	4.7	2.7	-	4.9	IE3	81.0	81.0	80.5	0.73	11.4	2.0	2.4	0.01097	22
		11P-100L-06E	1.5	950	12.9	7.4	6.5	3.7	-	5.5	IE3	82.5	82.5	81.5	0.71	15.2	2.3	2.8	0.01426	26
	112	11P-112M-06E	2.2	950	-	10.4	-	5.2	3.0	6.0	IE3	84.5	84.5	83.0	0.72	22	2.5	2.6	0.02567	37
	132	11P-132S-06E	3.0	970	-	13.5	-	6.7	3.9	6.0	IE3	88.0	88.0	86.5	0.73	30	1.9	2.5	0.05661	70
		11P-132M-06F	4.0	960	-	18.0	-	9.0	5.2	6.5	IE3	86.8	86.8	86.0	0.74	40	2.2	2.5	0.05661	75
		11P-L132M-06G	5.5	965	-	25	-	12.5	7.2	7.0	IE3	88.0	87.0	86.0	0.72	55	2.5	2.8	0.07550	80

M

Legend see page 257

6 poles, 1000 min^{-1}, 50 Hz

Type	P_N	at 380 V			at 420 V			Frequency inverter operation 400 V / 87 Hz			Frequency inverter operation 400 V / 100 Hz			Brake		
		I_N	M_A/M_N	M_K/M_N	I_N	M_A/M_N	M_K/M_N	P_N	n_N	I_N	P_N	n_N	I_N	M_B	J_B	m
	[kW]	[A]			[A]			[kW]	[min^{-1}]	[A]	[kW]	[min^{-1}]	[A]	[Nm]	x10^{-3} [kgm^2]	[kg]
11N-63-06F	0.12	0.50	1.5	1.4	0.58	1.8	1.8	0.21	1549	0.98	0.24	1780	1.1	2 5	0.015 0.015	1.1 1.1
11N-71-06E	0.18	0.73	1.8	2.0	0.75	2.2	2.4	0.31	1557	1.5	0.36	1790	1.7	5 2	0.015 0.015	1.1 1.1
11N-71-06F	0.25	0.95	2.0	2.0	1.0	2.4	2.4	0.44	1566	2.0	0.50	1800	2.3			
11N-80-06E	0.37	1.1	1.5	1.5	1.2	1.9	1.8	0.64	1601	2.2	0.74	1840	2.5	10 5	0.045 0.015	1.9 1.1
11N-80-06F	0.55	1.6	1.5	2.0	1.7	2.0	2.0	0.96	1618	2.9	1.1	1860	3.4			
11P-90S/L-06E	0.75	2.0	2.1	2.4	1.9	2.8	3.0	1.3	1636	3.5	1.5	1880	4.1	20 10	0.173 0.045	3.1 1.9
11P-100L-06D	1.1	2.8	1.7	2.1	2.7	2.2	2.6	1.9	1644	4.9	2.2	1890	5.7	40 20	0.45 0.173	4.6 3.1
11P-100L-06E	1.5	3.7	2.0	2.4	3.7	2.5	3.0	2.6	1653	6.8	3.0	1900	7.8			
11P-112M-06E	2.2	5.3	2.1	2.2	5.2	2.8	2.9	-	-	-	4.4	1900	11.0	60 40	0.86 0.45	6.3 4.6
11P-132S-06E	3.0	6.8	1.7	2.2	6.7	2.3	2.8	-	-	-	6.0	1940	14.2	100 60	1.22 0.86	10.0 6.3
11P-132M-06F	4.0	9.2	1.9	2.1	9.0	2.4	2.8	-	-	-	8.0	1920	18.9			
11P-L132M-06G	5.5	12.7	2.2	2.4	12.6	2.8	3.2	-	-	-	11.0	1930	26			

Legend see page 257

6 poles, 1200 min^{-1}, 60 Hz

Series	IEC frame size	Type	P_N [kW]	n_N [min^{-1}]	I_N at 132 V [A]	I_N at 230 V [A]	I_N at 400 V [A]	I_N at 265 V [A]	I_N at 460 V [A]	$\frac{I_A}{I_N}$	IE class	η 4/4 [%]	η 3/4 [%]	η 1/2 [%]	cosφ	M_N [Nm]	$\frac{M_A}{M_N}$	$\frac{M_K}{M_N}$	J_{mot} [kgm^2]	m [kg]
11N	63	11N-63-06F	0.12	1105	1.7	0.96	0.55	0.83	0.48	2.9	IE1	53.2	50.4	46.6	0.59	1.1	2.0	2.0	0.00051	6.0
	71	11N-71-06E	0.18	1105	2.8	1.6	0.91	1.4	0.79	3.6	IE1	54.9	51.8	45.4	0.52	1.5	2.4	2.6	0.00077	9.0
		11N-71-06F	0.25	1110	3.5	2.0	1.2	1.8	1.0	3.7	IE1	58.5	58.0	57.5	0.53	2.1	2.6	2.6	0.00093	9.0
	80	11N-80-06E	0.37	1130	3.8	2.2	1.2	1.9	1.1	3.7	IE1	63.1	59.9	53.1	0.68	3.2	2.2	2.2	0.00190	11
		11N-80-06F	0.55	1140	5.3	3.2	1.9	2.8	1.6	4.3	IE1	66.0	62.4	56.2	0.70	4.6	2.0	2.0	0.00304	11
11P	90	11P-90S/L-06E	0.75	1145	5.8	3.3	1.9	2.9	1.7	6.2	IE3	82.5	80.0	77.0	0.69	6.3	2.9	3.4	0.00658	19
	100	11P-100L-06D	1.1	1150	8.1	4.6	2.7	4.0	2.3	5.7	IE1	84.0	83.0	82.5	0.70	9.1	2.1	2.8	0.01097	22
		11P-100L-06E	1.5	1155	11.0	6.3	3.6	5.5	3.1	6.3	IE2	86.5	85.5	82.5	0.69	12.4	2.5	3.2	0.01426	26
	112	11P-112M-06E	2.2	1165	-	8.9	5.1	-	4.4	6.9	IE2	87.5	85.5	82.5	0.71	18.2	2.7	3.4	0.02567	37
	132	11P-132S-06E	3.0	1170	-	12.0	6.9	-	6.0	6.3	IE3	89.5	88.5	85.5	0.70	25	1.8	2.9	0.05661	70
		11P-132M-06F	4.0	1165	-	15.8	9.1	-	7.9	6.6	IE3	89.5	88.5	85.5	0.71	33	1.9	3.0	0.05661	75
		11P-L132M-06G	5.5	1170	-	22	12.5	-	10.8	7.4	IE3	91.0	88.5	85.5	0.70	45	2.4	3.5	0.07550	80

M

Legend see page 257

6 poles, 1200 min^{-1}, 60 Hz

Type	P_N	at 380 V			at 420 V			at 440 V			at 480 V			Frequency inverter operation 460 V / 105 Hz			Frequency inverter operation 460 V / 120 Hz			Brake		
		I_N	M_A/M_N	M_K/M_N	I_N	M_A/M_N	M_K/M_N	I_N	M_A/M_N	M_K/M_N	I_N	M_A/M_N	M_K/M_N	P_N	n_N	I_N	P_N	n_N	I_N	M_B	J_B	m
	[kW]	[A]			[A]			[A]			[A]			[kW]	[min^{-1}]	[A]	[kW]	[min^{-1}]	[A]	[Nm]	x10^{-3} [kgm^2]	[kg]
11N-63-06F	0.12	0.52	1.8	1.8	0.6	2.1	2.3	0.44	1.8	1.8	0.51	2.3	2.3	0.21	1934	0.87	0.24	2210	1.0	2 5	0.015 0.015	1.1 1.1
11N-71-06E	0.18	0.80	2.2	2.4	0.8	2.6	2.8	0.68	2.2	2.4	0.72	2.6	2.8	0.32	1934	1.4	0.36	2210	1.7	5 2	0.015 0.015	1.1 1.1
11N-71-06F	0.25	1.0	2.4	2.4	1.1	2.8	2.8	0.90	2.4	2.4	1.0	2.8	2.8	0.44	1943	1.8	0.50	2220	2.1			
11N-80-06E	0.37	1.1	1.9	1.9	1.2	2.5	2.3	1.0	1.9	1.9	1.1	2.4	2.4	0.65	1978	2.0	0.74	2260	2.3	10 5	0.045 0.015	1.9 1.1
11N-80-06F	0.55	1.8	1.7	2.2	2.0	2.2	2.2	1.6	1.7	2.2	1.6	2.3	2.3	0.96	1995	2.9	1.1	2280	3.4			
11P-90S/L-06E	0.75	1.9	2.4	2.9	1.9	3.2	3.6	1.7	2.4	2.9	1.7	3.2	3.8	1.3	2004	3.0	1.5	2290	3.5	20 10	0.173 0.045	3.1 1.9
11P-100L-06D	1.1	2.7	1.8	2.5	2.7	2.3	3.0	2.4	1.8	2.5	2.4	2.5	3.1	1.9	2013	4.2	2.2	2300	4.4	40 20	0.45 0.173	4.6 3.1
11P-100L-06E	1.5	3.7	2.2	2.7	3.6	2.7	3.4	3.2	2.2	2.7	3.3	2.8	3.6	2.6	2021	5.7	3.0	2310	6.0			
11P-112M-06E	2.2	5.2	2.3	2.9	5.1	3.0	3.8	4.5	2.3	2.9	4.6	3.1	3.5	-	-	-	4.4	2330	9.3	60 40	0.86 0.45	6.3 4.6
11P-132S-06E	3.0	7.0	1.6	2.6	6.9	2.2	3.2	6.1	1.6	2.6	6.0	2.3	3.1	-	-	-	6.0	2340	12.6	100 60	1.22 0.86	10.0 6.3
11P-132M-06F	4.0	9.3	1.6	2.5	9.2	2.1	3.4	8.1	1.6	2.5	7.9	2.5	3.1	-	-	-	8.0	2330	16.6			
11P-L132M-06G	5.5	12.7	2.1	3.0	12.6	2.7	4.0	10.9	2.1	3.0	11.3	3.0	3.7	-	-	-	11.0	2340	23			

Legend see page 257

Dimension sheets

Integral motor frame sizes 63 - 132

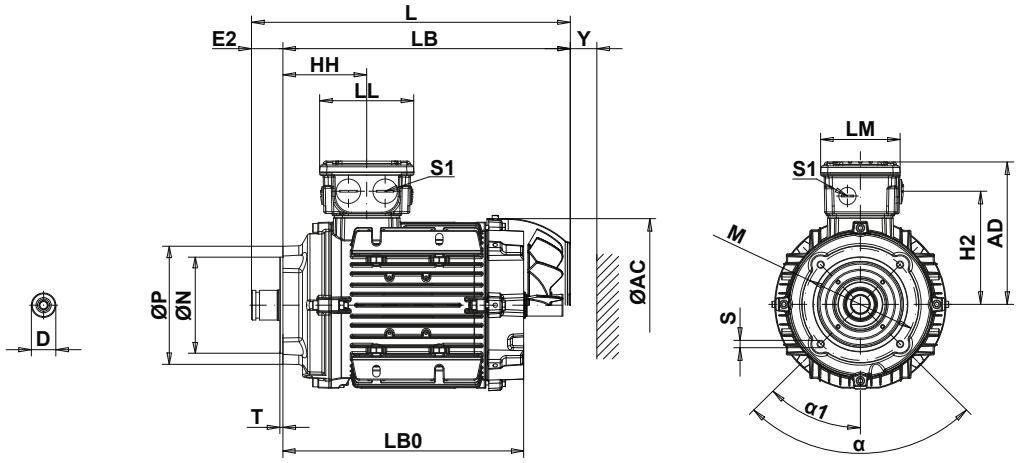

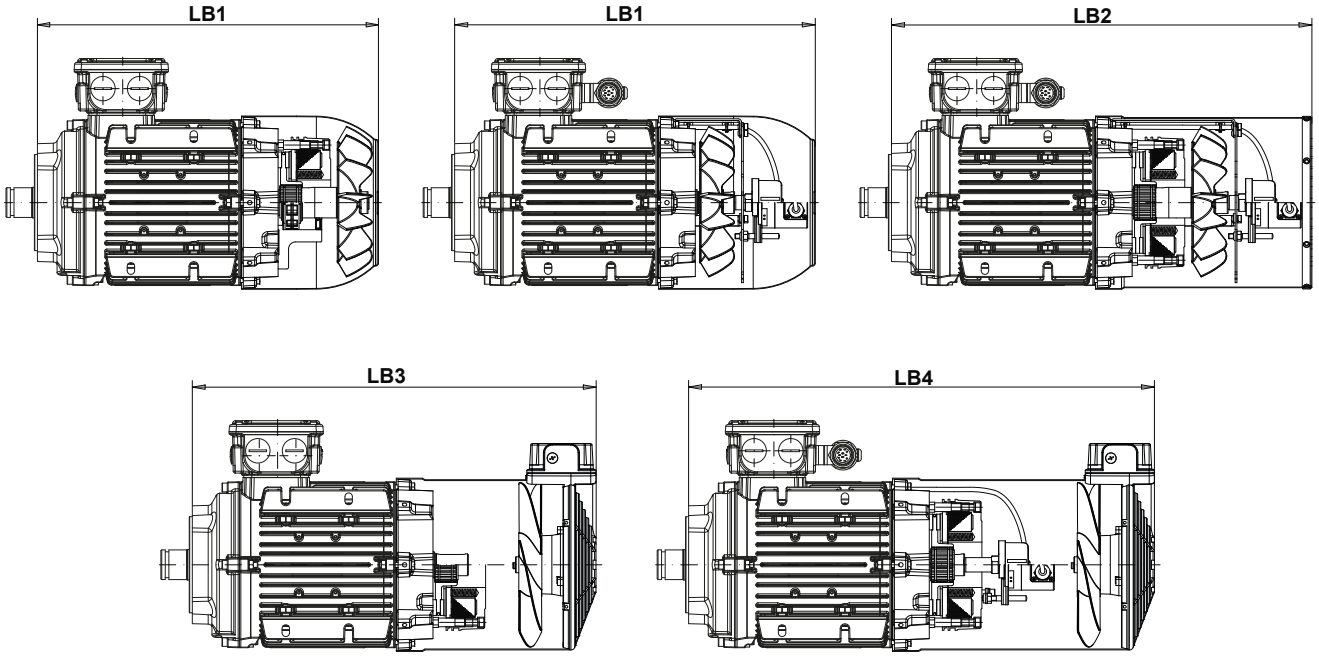

Description of the dimensions L, LB, LB0,... see page 270

Tolerances		
Dimension name	ISO tolerance DIN EN ISO 286-2	
D	≤ Ø 30 mm	j6
	> Ø 30 mm to Ø 50 mm	k6
	> Ø 50 mm	m6
N	≤ Ø 250 mm	j6
	> Ø 250 mm	h6

Dimension tolerances		
Dimension name	Dimensions	Permissible deviation
M	up to 200 mm	± 0.25 mm
	more than 200 up to 500 mm	± 0.5 mm
	ore than 500 mm	± 1.0 mm

Dimensions in mm. Motor dimensions are typical values. Subject to change.

IEC frame size	63	71	80	90	100	L100	112	132	L132
AC	126	141	159	178	199	199	221	261	261
AD	128	136	145	155	165	165	185	205	205
D	16	19	24	24	34	34	34	42	42
E2	26	26	26	26	26	26	36	36	36
HH	90	99	95	96	109	109	130	123	123
H2	89	97	106	116	126	126	141	161	161
LL	108	108	108	108	108	108	137	137	137
LM	92	92	92	92	92	92	118	118	118
M	110	110	110	110	110	110	130	130	130
N	80	80	80	80	80	80	110	110	110
P	120	120	120	120	120	120	160	160	160
S	M6	M6	M6	M6	M6	M6	M8	M8	M8
S1	2 x M25 x 1,5 + 2 x M16 x 1,5						2 x M32 x 1,5 + 2 x M16 x 1,5		
T	3	3	3	3	3	3	4	4	4
Y	25	26	30	33	36	36	41	50	50
α	4 x 90°	4 x 90°	4 x 90°	4 x 90°	4 x 90°	4 x 90°	4 x 90°	4 x 90°	4 x 90°
α_1	45°	45°	45°	45°	45°	45°	45°	45°	45°
L	230	264	272	314	364	402	384	449	487
LB	204	238	246	288	338	376	348	413	451
LB0	173	196	205	242	285	323	290	359	397
LB1	248	287	304	361	422	460	435	531	569
LB2	-	358	381	437	500	538	511	614	652
LB3	322	347	365	422	476	514	493	598	636
LB4	392	417	435	485	532	570	549	650	688

Integral motor frame sizes 160 to 200

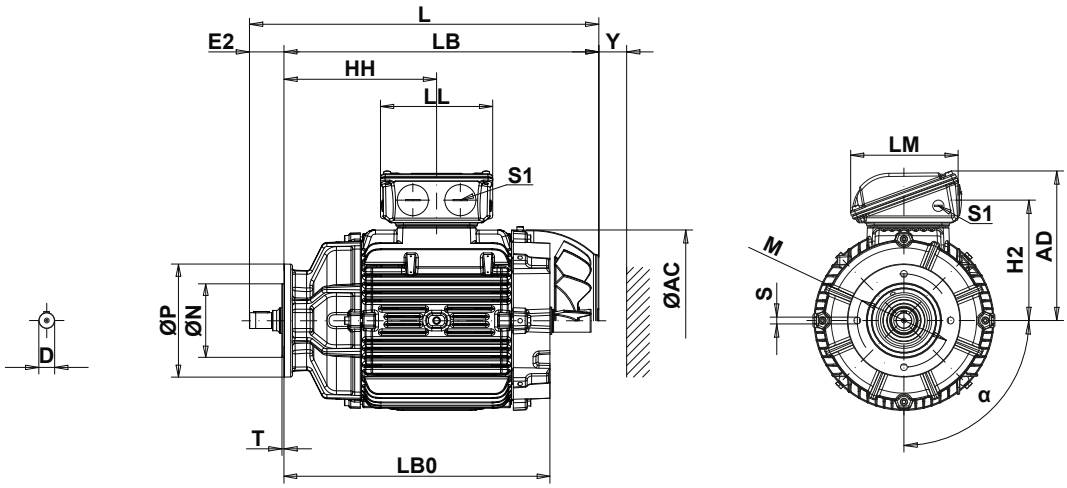

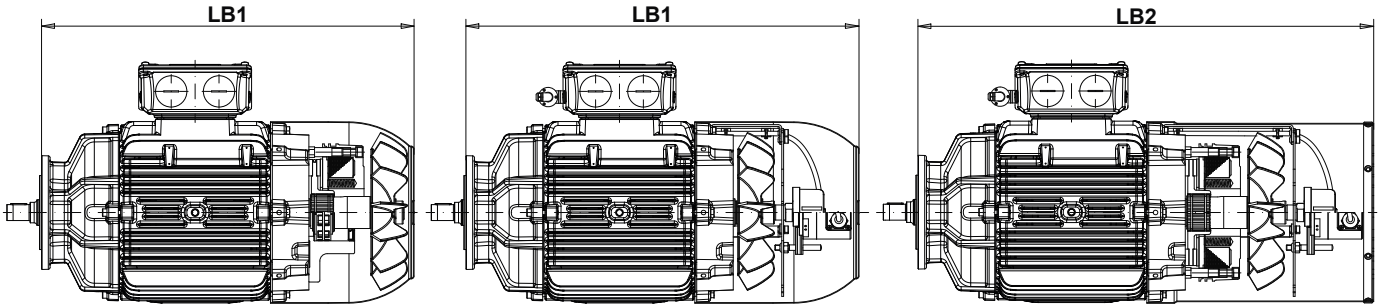

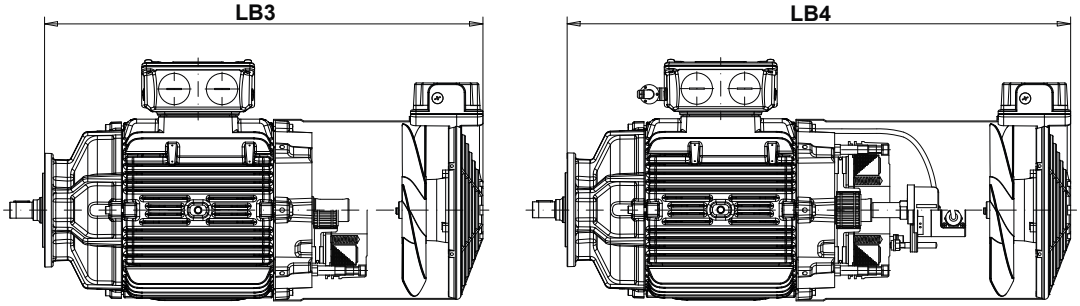

Description of the dimensions L, LB, LB0,... see page 270

Tolerances		
Dimension name	ISO tolerance DIN EN ISO 286-2	
D	≥ Ø 28 mm	n6
N	≤ Ø 250 mm	j6
	> Ø 250 mm	h6

Dimension tolerances		
Dimension name	Dimensions	Permissible deviation
M	up to 200 mm	± 0.25 mm
	more than 200 up to 500 mm	± 0.5 mm
	more than 500 mm	± 1.0 mm

Dimensions in mm. Motor dimensions are typical values. Subject to change.

IEC frame size	160M		160L		180M	180L	200L
Flange	FR-200	FR-250	FR-200	FR-250	FR-250	FR-250	FR-300
AC	318	318	318	318	347	347	386
AD	266	266	266	266	281	281	317
D	28	28	28	28	32	32	38
E2	61	66	61	66	66	66	71
HH	270	265	270	265	303	303	347
H2	213	213	213	213	228	228	260
LL	199	199	199	199	199	199	230
LM	190	190	190	190	190	190	220
M	165	215	165	215	215	215	265
N	130	180	130	180	180	180	230
P	200	250	200	250	250	250	300
S	12	15	12	15	15	15	15
S1	2 x M40 x 1,5 + 2 x M16 x 1,5						2 x M50 x 1,5 + 2 x M16 x 1,5
T	3,5	4	3,5	4	4	4	4
Y	65	65	65	65	68	68	78
α	4 x 90°	4 x 90°	4 x 90°	4 x 90°	4 x 90°	4 x 90°	4 x 90°
L	606	606	650	650	674	712	803
LB	545	540	589	584	608	646	732
LB0	480	475	524	519	531	569	629
LB1	669	664	713	708	726	764	858
LB2	747	742	791	786	839	877	976
LB3	757	752	801	796	828	866	928
LB4	823	818	867	862	893	931	1008

Length description motor modules

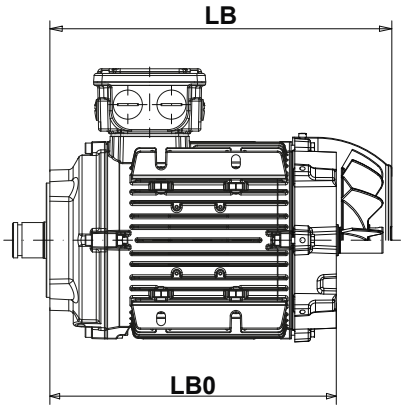

LB Self ventilated
LB0 Non-ventilated

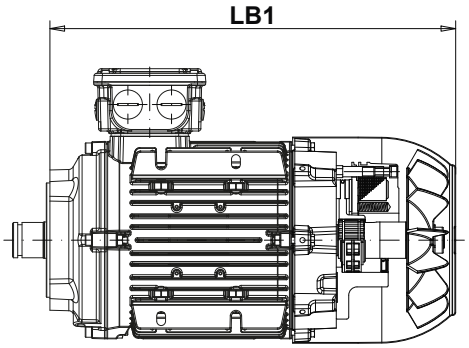

LB1 Self ventilated with brake or back stop type RSM

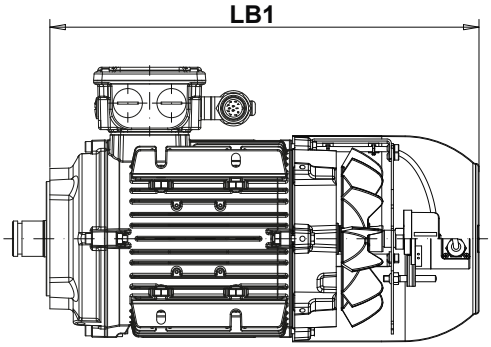

LB1 Self ventilated with standard encoder, SSI multiturn encoder or resolver

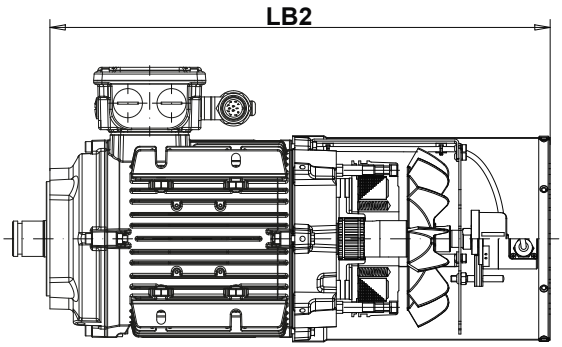

LB2 Self ventilated with brake and standard encoder, SSI multiturn encoder or resolver

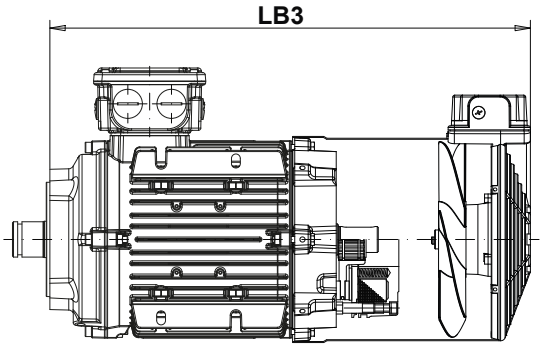

LB3 Forced ventilation with or without brake

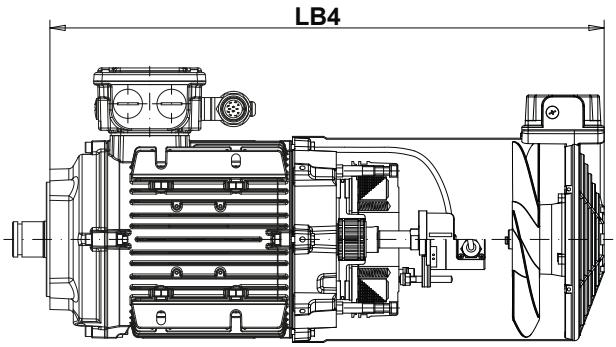

LB4 Forced ventilation with/without brake and standard encoder, SSI multiturn encoder or resolver

Motor modules

Temperature control

TH	Bimetal switch for switch off
2TH	Bimetal switch for warning and switch off
TF	PTC thermistor for switch off
2TF	PTC thermistor for warning and switch off
KTY	Temperature sensor

In the standard version, the motors are designed with motor protection in the motor winding. In order to protect the winding of a three-phase induction motor against thermal overloads, resulting for example from overloading and operation with only two phases, one of the following devices can be provided:

TH - Bimetal switch „NC contact“

The contact is normally closed (NC); the disc opens when the winding's temperature reaches limits dangerous for the insulation system. When a limit temperature is reached, these bimetal switches (NC contacts) can deactivate an auxiliary circuit. The circuit can only be reclosed following a considerable fall in temperature. When the motor current rises quickly (e.g. with a locked rotor), these switches are not suitable due to their large thermal time constants.

TF - PTC thermistor

The most comprehensive protection against thermal overloading caused in starting against heavy masses, heavy alternating load and high frequency starting resp. brake operation or high ambient temperatures of the motor is provided by PTC thermistors installed in the motor winding.
The sensors are temperature sensitive resistors (PTC) which change value almost instantaneously at their response temperature. The switch off level corresponds to the thermal class of the insulation. This characteristic is used in combination with tripping devices (on request) to monitor the temperature of the motor. For warning purposes additional bimetal switches or PTC thermistors with lower switch off temperature can be fitted. These correspond to the key **2TH** and **2TF**.

KTY - Temperature sensor

This sensor is a semiconductor that changes its resistance depending on temperature in accordance with a defined characteristic. The evaluation is made by an extra tripping device (on request). The temperature sensor is embedded in the winding head of the motor in the same manner as a PTC thermistor. Evaluation is performed, for example, in the frequency inverter.

Anti-condensation heating

SH	Anti-condensation heating

Windings of motors, which are operating at conditions of extreme temperature changes or extreme climatic conditions, are endangered of condensation water. The built in anti-condensation heating warms up the motor windings after switching off and prevents the motor inside from condensation water.

During motor operation the anti-condensation heating must not be switched on. The limit temperature of the winding (+155 °C in thermal class F) must not be exceeded! Temperature control is advisable!

The anti-condensation heating must be supplied with a separate voltage.
Supply voltage: 230 V (1~)

Voltage range for IEC frame sizes: 71 to 200: 220 - 240 V, 50/60 Hz

IEC frame size	Heating performance [W]
71	13
80	25
90	
100	
112	50
132	
160	75
180	
200	100

Climatic protection

K1	Humidity protection
K2	Corrosion protection

The following standardised climatic protection executions are available for motors exposed to extreme climatic conditions:

K1 - Humidity protection
Humid warm climate or humid variable climate with max. relative air humidity of 92 %, also for areas on the seaside

K2 - Corrosion protection
Relative air humidity of more than 92 % (extreme formation of condensation water), furthermore against chemically aggressive gases and vapours of increased concentration

Drain

KB	Drain

In cases of increased air humidity, periodic duty, installation in the open air or when subject to extreme climatic conditions, the motors are endangered by the formation of condensation. The endshields have holes for drainage of water that may condense inside the frame. These holes are supplied with rubber drain plugs, which leave the factory in closed position and must be opened periodically to allow the exit of condensed water.

To determine the correct position of the hole the exact mounting position of the motor must be defined.

M

Terminal box designs

MIP	Multipin box
MIG..	MIG - connect systems

MIP - Multipin box
IEC frame sizes: 63 to 200

This extended terminal box was designed to permit additional options, such as brakes, incremental encoders, thermal elements, anti-condensation heating and the like, to be connected in an orderly fashion in the box.
The terminal box can be equipped with up to 22 sockets, including a brake rectifier. The terminal used are two-wire terminals fitted with cage clamp connectors. These are suitable for single-wire, multi-wire and fine-wire lines with diameters up to 4 mm².

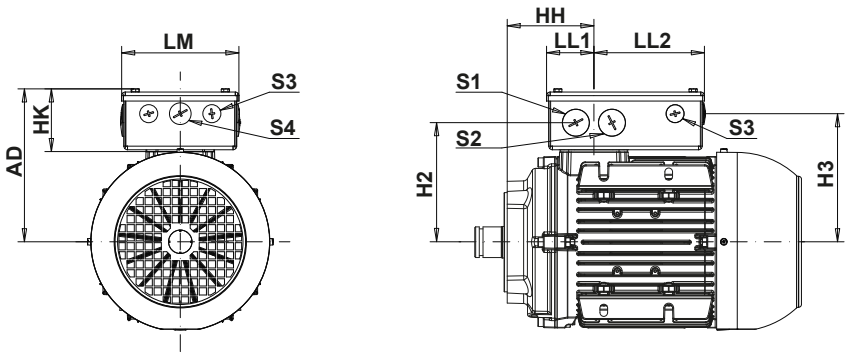

IEC frame size		MIP box											
		AD	HH	HK	H2	H3	LM	LL1	LL2	S1	S2	S3	S4
63		132	90	69	95	99	130	52	122	2xM25	2xM25	4xM16	1xM20
71		140	99	69	103	107	130	52	122	2xM25	2xM25	4xM16	1xM20
80		149	95	69	112	116	130	52	122	2xM25	2xM25	4xM16	1xM20
90		159	96	69	122	126	130	52	122	2xM25	2xM25	4xM16	1xM20
100		169	109	69	132	136	130	52	122	2xM25	2xM25	4xM16	1xM20
112		182	130	70	144	154	140	68	138	2xM32	2xM32	4xM16	1xM25
132		202	123	70	164	174	140	68	138	2xM32	2xM32	4xM16	1xM25
160	FR-200	269	270	104	211	220	205	105	171	2xM50	2xM40	4xM16	1xM25
	FR-250		265										
	FR-300		260										
180	FR-250	284	303	104	231	240	205	105	171	2xM50	2xM40	4xM16	1xM25
	FR-300		298										
200		300	348	104	250	256	205	99	177	2xM50	2xM40	4xM16	1xM25

Dimensions in mm

MIG - connect system

Models: MIG10B, MIG16, MIG40, MIG10-FL
IEC frame sizes: 63 to 180

The MIG (Multiplug) - connect system is a standardised distributed connection system. It is used for the integration of power and control cabling into a single motor connector. The plug is assembled in-house and replaces the terminal box.

Most important advantages:

- Quick installation and service at site
- Avoiding wiring faults
- Motor replacement without electrical manipulation

For motor frame sizes 63 to 180 three MIG types of different power ratings are used. For each MIG model mating connectors are available.

MIG10B:
With 18 PINs and ground this most compact plug enables connection to motors up to a rated current of 10 A with voltages up to 400/690 V and protection degrees up to IP67. Beside the power wires a variety of auxiliary wires can be connected as well.

MIG16:
This MIG for mid-sized motors supports a maximum current of 16 A at 500 V with 10 PINs in total. In case a wider variety of auxiliary PINs is necessary a mixed holding can be offered (6 PINs -16 A; 12 PINs - auxiliary).

MIG40:
To achieve all contacts to be connected with one plug a mixed holding of PINs has to be used in this case. 6 PINs for 40 A at 400/690 V together with 12 PINs auxiliary guarantees full contactability.

MIG10-FL:
On demand this MIG can replace the normal forced ventilation connection. Thereby this motor module has all advantages of a MIG - connect plug system. The plug is equipped with 3 PINs and grounding and can be mounted on every forced ventilation size.

MIG40 execution

MIG - connect system overview table

IEC frame size		63	71	80	90	100	112	132	160	180
400 V, 50 Hz	4p	10B	10B	10B	10B	10B	16	16	40	40
	6p	10B	10B	10B	10B	10B	16	16	40	40
230 V, 50 Hz	4p	10B	10B	10B	10B	16	-	-	-	-
	6p	10B	10B	10B	10B	16	-	-	-	-
400 V, 100 Hz	4p	10B	10B	10B	10B	16	40	40	-	-
	6p	10B	10B	10B	10B	10B	16	40	-	-
460 V, 60 Hz	4p	10B	10B	10B	10B	10B	16	16	40	40
	6p	10B	10B	10B	10B	10B	16	16	40	40
460 V, 120 Hz	4p	10B	10B	10B	10B	16	16	40	-	-
	6p	10B	10B	10B	10B	10B	16	40	-	-

PIN assignment MIG10B

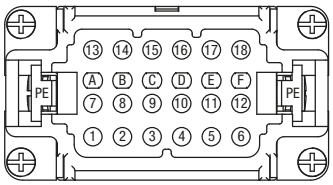

PIN	Assignment
PE	Grounding terminal
1	Winding connection U1
2	Winding connection V1
3	Winding connection W1
4*	Bimetal release 1 TH1
5	Brake heating tape
6	Anti-condensation heating
7	Winding connection W4
8	Winding connection U4
9	Winding connection V4
10*	Bimetal release 1 TH1
11	Brake heating tape
12	Anti-condensation heating

PIN	Assignment
13	Brake
14	Brake
15	Brake microswitch
16	Brake microswitch
17*	Bimetal release 2 TH2
18*	Bimetal release 2 TH2
*alternatively	
4	PTC thermistor 1 TF1
10	PTC thermistor 1 TF1
17	PTC thermistor 2 TF2
17	Resistance thermometer KTY1
18	PTC thermistor 2 TF2
18	Resistance thermometer KTY 1

PIN assignment MIG16

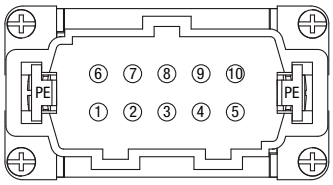

PIN	Assignment
PE	Grounding terminal
1	Winding connection U1
2	Winding connection V1
3	Winding connection W1
4*	Brake
5*	Brake
6	Winding connection W4
7	Winding connection U4

PIN	Assignment
8	Winding connection V4
9*	Temperature sensor 1
10*	Temperature sensor 1
*alternatively	
9	Anti-condensation heating
10	Anti-condensation heating
4	Temperature sensor 2
5	Temperature sensor 2

PIN assignment MIG40

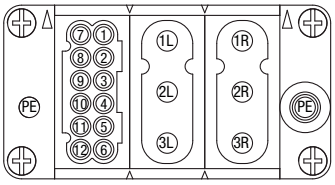

PIN	Assignment
PE	Grounding terminal
1R	Winding connection U1
2R	Winding connection V1
3R	Winding connection W1
1L	Winding connection W4
2L	Winding connection U4
3L	Winding connection V4
1	Brake
2	Temperature sensor 1
3	Temperature sensor 2

PIN	Assignment
4	Temperature sensor 3
5	Anti-condensation heating
6	
7	Brake
8	Temperature sensor 1
9	Temperature sensor 2
10	Temperature sensor 3
11	Anti-condensation heating
12	

PIN assignment MIG10-FL

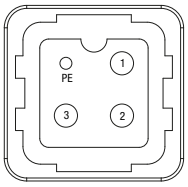

PIN	Assignment
PE	Grounding terminal
1	Power connection L1
2	Power connection L2
3	Power connection L3

Dimension sheet MIG10B, MIG16, MIG40

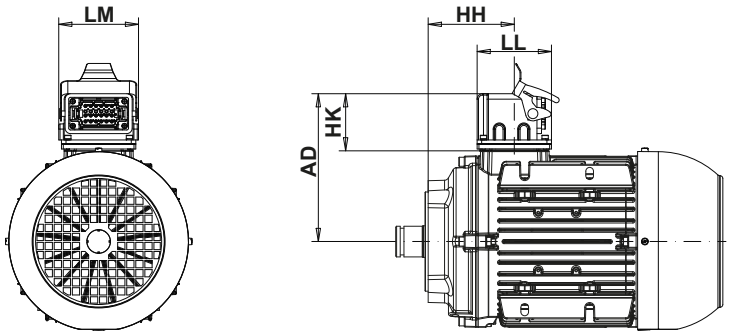

IEC frame size		MIG - connect system					
		MIG Type	AD	HH	HK	LL	LM
63		10B	124	90	61	82	86
71		10B	132	99	61	82	86
80		10B	141	95	61	82	86
90		10B	151	96	61	82	86
100		10B / 16	161	109	61	82	86
112		16 / 40	173	130	61	82	86
132		16 / 40	193	123	61	82	86
160	FR-200	40	226	270	61	82	86
	FR-250			265			
180		40	241	303	61	82	86

Dimensions in mm

Dimension sheet MIG10-FL

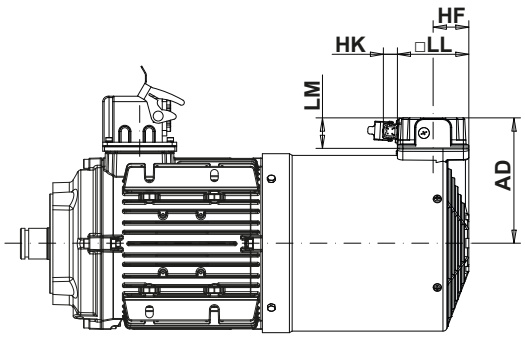

IEC frame size	MIG10-FL				
	AD	HF	HK	□LL	LM
63	115	60	28	95	32
71	123	60	28	95	32
80	132	60	28	95	32
90	142	70	28	95	32
100	151	70	28	95	32
112	163	70	28	95	32
132	183	52,5	28	95	32
160	210	52,5	28	95	32
180	210	80	28	95	32

Dimensions in mm

M

Brake system and Back stop

BR..	Spring loaded brake
BBRHGD..	Double spring loaded brake
BRGH..	Totally closed spring loaded brake (Heavy Duty)
KKM	Back stop (frame sizes 63 to 90)
RSM	Back stop (frame sizes 100 to 200)

The mounted spring loaded brake is a single-disc brake with two friction surfaces. It is released electromagnetically and brakes by spring pressure, when the brake is de-energised. The DC-brake coil is supplied from a rectifier which is located in the motor terminal box and will be delivered as standard for AC-side connection.

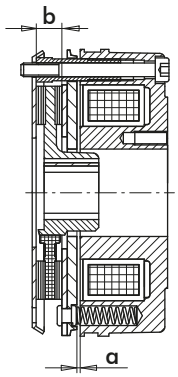

a air gap
b brake lining thickness

Product information

- Voltages: 24 V DC and 195 V DC (102 V DC special execution)
- All bare parts corrosion protected
- Short switching times
- Large reserve for abrasion
- Designed for 100 % duty cycle and max. admissible temperature limit of +145 °C
- Degree of protection IP55 (standard)

On motors with brake-endshield on the non-driven side subsequent installation of brakes is possible (brake-motor-set available).

Function and adjustment (see illustration below)

When the brake is de-energised, the springs are pressing the armature disc (9) against the brake disc (7) and the friction plate (5). The motor shaft (3) is braked via the brake disc (7) and the gear hub (6). When the brake is energised, a magnetic field is built up and the armature disc (9) is pulled against the magnetic case with the coil (10). When the motor is running, the brake disc (7) can rotate freely from the brake surfaces. In the case of power failure, the brake functions automatically by spring force. A manual release (11) is optionally available (subsequent assembling is also possible).

Braking torque adjustment

At delivering, the brakes and the brake motors are adjusted to the brake torque M_B. Brake torque reduction is done by removing of springs. Reduced brake torque see page 277.

Maintenance

Due to abrasion of the friction linings (7) the air gap "a" (see page 275) between magnetic case (10) and armature disc (9) expands. It is necessary to check and readjust the air gap in certain intervals or replace the brake disc (7).

Readjustment of the air gap

First of all the three fixing screws (13) must be loosened half a turn. Now the sleeve screws (8) can be screwed into the magnetic case (10) by turning counter-clockwise. By turning the three fixing screws (13) clockwise, the magnetic case (10) can be moved in direction to the armature disc (9), as long as the nominal air gap a_{normal} (see table on page 278) is obtained. Now the three sleeve screws (8) will be unscrewed clockwise from the magnetic case (10) and the fixing screws (13) will be fixed. Please check the air gap "a" with a feeler gauge, if it is symmetrical and adjust it if necessary.

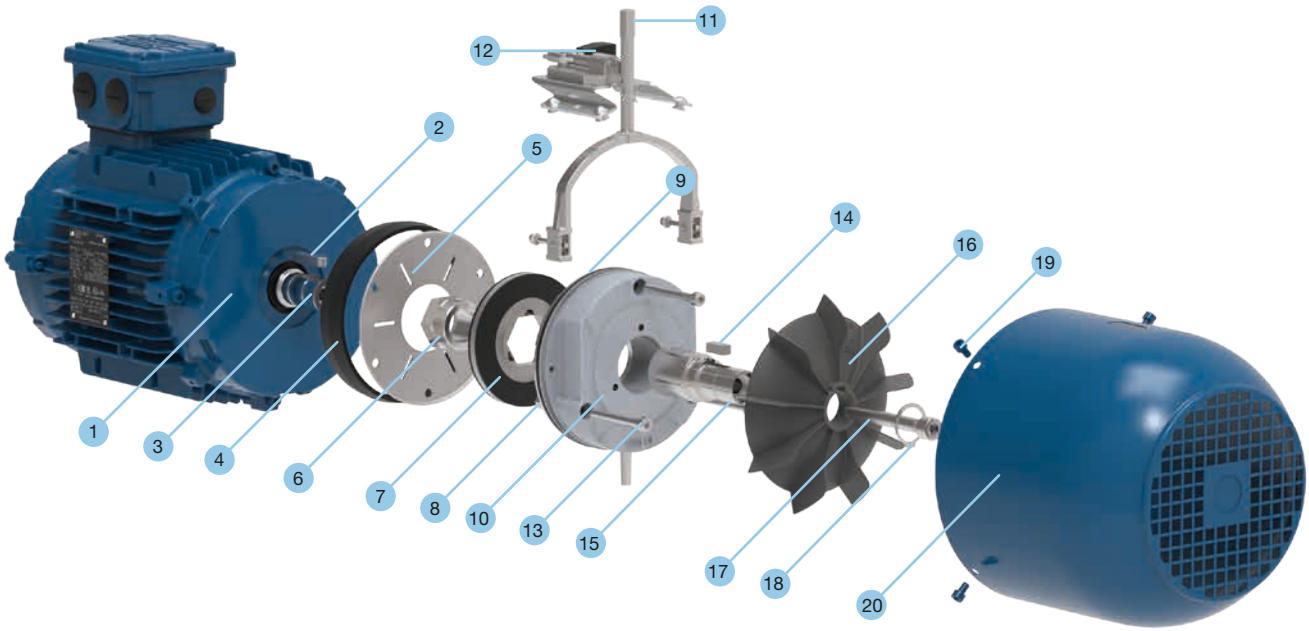

1 Brake endshield
2 Key
3 Motor shaft
4 Dust protection ring
5 Friction plate
6 Gear hub
7 Brake disc with friction linings
8 Sleeve screws
9 Armature disc
10 Magnetic case
11 Manual release lever (optional)
12 Locking device
13 Socket cap screw
14 Key
15 Brake shaft extension
16 Fan
17 Socket cap screw
18 Retaining ring
19 Fan cover screws
20 Fan cover (brake execution)

Exploded view: Brake with manual release and locking device, frame size 100

Brake selection

As shown in the following selection table, it is possible to supply brake motors with different brake torques to correspond to the most possible applications. It is also possible to achieve an optimal adaption, by means of the mode of connection of the brake. If exact values about the application are available, we recommend to calculate the braking torque according to the following formulas on page 282, otherwise the proportion between motor rated torque (M_N) and braking torque (M_B) can be taken as an indication for the dimensioning of the brake and check, if the safety factor is sufficient.
For normal applications we recommend sizing the brake 1.5 - 2 times the motor rated torque (M_N), for special applications (lifting gears, switching operation, etc.) 2 - 3 times the motor torque and as holding brake approx. 1 time the rated torque.

- **Execution A - working brake**
  M_B approx. 1.5 - 2 times M_N, or applications with medium masses to be accelerated and medium number of starts

- **Execution B - holding brake**
  M_B approx. 1 time M_N for drives with small masses to be accelerated and number of starts resp. for keeping the drive stopped

Brake selection table

IEC frame size	BR.. Standard brake		BBRHGD.. Double brake		BRGH.. Totally closed brake	
	Standard Execution A M_B	Execution B M_B	Standard Execution A M_B	Execution B M_B	Standard Execution A M_B	Execution B M_B
63	2 Nm	5 Nm	-	-	-	-
71	5 Nm	2 Nm	2 x 6 Nm	-	5 Nm	-
80	10 Nm	5 Nm	2 x 12,5 Nm	2 x 6 Nm	10 Nm	5 Nm
90	20 Nm	10 Nm	2 x 25 Nm	2 x 12,5 Nm	20 Nm	10 Nm
100	40 Nm	20 Nm	2 x 50 Nm	2 x 25 Nm	40 Nm	20 Nm
112	60 Nm	40 Nm	2 x 75 Nm	2 x 50 Nm	60 Nm	40 Nm
132	100 Nm	60 Nm	2 x 125 Nm	2 x 75 Nm	100 Nm	60 Nm
160	150 Nm	100 Nm	2 x 187 Nm	2 x 125 Nm	150 Nm	100 Nm
180	250 Nm	150 Nm	2 x 300 Nm	2 x 187 Nm	250 Nm	150 Nm
200	400 Nm	250 Nm	2 x 500 Nm	2 x 300 Nm	400 Nm	250 Nm

Brake torque reduction						
Standard brake (BR..) and Totally closed brake "heavy duty" (BRGH..)				Double brake (BBRHGD..)		
Standard 7 springs	5 springs	4 springs	3 springs	Standard 7 springs	5 springs	4 springs
5 Nm	3,5 Nm	3 Nm	2 Nm	2 x 6 Nm	2 x 4 Nm	2 x 3.5 Nm
10 Nm	7 Nm	6 Nm	4 Nm	2 x 12.5 Nm	2 x 8.5 Nm	2 x 7 Nm
20 Nm	14 Nm	12 Nm	8 Nm	2 x 25 Nm	2 x 17.5 Nm	2 x 14 Nm
40 Nm	28 Nm	23 Nm	17 Nm	2 x 50 Nm	2 x 35 Nm	2 x 28 Nm
60 Nm	43 Nm	34 Nm	26 Nm	2 x 75 Nm	2 x 52 Nm	2 x 42 Nm
100 Nm	70 Nm	57 Nm	42 Nm	2 x 125 Nm	2 x 89 Nm	2 x 70 Nm
150 Nm	105 Nm	85 Nm	65 Nm	2 x 187 Nm	2 x 132 Nm	2 x 107 Nm
Standard 8 springs	6 springs	4 springs		Standard 8 springs	6 springs	4 springs
250 Nm	187 Nm	125 Nm		2 x 300 Nm	2 x 225 Nm	2 x 150 Nm
400 Nm	300 Nm	200 Nm		2 x 500 Nm	2 x 375 Nm	2 x 250 Nm
1000 Nm	500 Nm	-		-	-	-

M

Spring loaded brake: electrical characteristics													
U_{2nenn}=	U_2=	Brake size		2	5	10	20	40	60	100	150	250	400
[V]	[V]	M_B	[Nm]	2	5	10	20	40	60	100	150	250	400
195	162-236	Coil current	[A]	0.13	0.13	0.18	0.2	0.26	0.32	0.42	0.5	0.65	0.85
		Power	[W]	26	26	36	38	50	63	82	99	127	165
		Resistance	[Ω]	1475	1475	1070	990	754	600	464	385	300	230
24	19-28	Coil current	[A]	1.14	1.14	1.44	1.7	2.1	2.7	3.3	4	5.2	7.3
		Power	[W]	27	27	34	41	50	65	80	96	125	175
		Resistance	[Ω]	21	21	16.7	14	11.6	8.9	7.2	6	4.6	3.3
102 1)	85-133	Coil current	[A]	0.3	0.3	0.38	0.45	0.53	0.6	0.85	0.94	1.23	1.76
		Power	[W]	31	31	38	46	54	60	87	95	125	179
		Resistance	[Ω]	340	340	271	228	192	174	120	109	83	58

standard brake

1) special execution (on demand)

Spring loaded brake: mechanical characteristics											
Brake size		2	5	10	20	40	60	100	150	250	400
M_B	[Nm]	2	5	10	20	40	60	100	150	250	400
P_{20}	[W]	26	26	36	38	50	63	82	100	127	165
J_B	[kgm²x10⁻³]	0.015	0.015	0.045	0.172	0.45	0.86	1.22	2.85	6.65	19.5
P_R	[J/s]	80	80	100	130	160	200	250	300	350	400
W_{Rmax}	[Jx10³]	3	3	6	12	25	35	50	75	105	150
W_{RN}	[Jx10⁷]	5	5	12	20	35	60	125	200	340	420
a_{normal}	[mm]	0.2	0.2	0.2	0.3	0.3	0.3	0.4	0.4	0.5	0,5
a_{max}	[mm]	0.6	0.6	0.7	0.8	0.9	1	1.1	1.1	1.2	1.2
b_{min}	[mm]	4.5	4.5	5.5	7.5	9.5	11.5	12.5	14.5	16.5	16.5
m	[kg]	1.1	1.1	1.9	3.1	4.6	6.3	10	14.7	21.5	35
t_2=	[ms]	35	35	45	60	80	120	160	200	220	300
t_1≈	[ms]	70	70	95	140	175	210	280	350	500	800
t_1=	[ms]	30	30	45	60	75	90	120	150	180	200
Fits on IEC motor frame size		63, 71	63, 71, 80	80, 90	90, 100	100, 112	112, 132	132, 160	160, 180	180, 200	200

	Designation	Unit
Rated torque of spring loaded brake	M_B	[Nm]
Brake coil power consumption	P_{20}	[W]
Brake moment of inertia	J_B	[kgm²]
Frisction performance	P_R	[J/s]
Friction per switch cycle	W_{Rmax}	[J]
Friction until readjustment	W_{RN}	[J]
Air gap	a	[mm]

	Designation	Unit
Minimum brake rotor thickness	b	[mm]
Mass of moved machine parts	m	[kg]
Engaging time	t_1	[ms]
Release time of brake	t_2	[ms]
Output voltage DC rectifier	U_2=	[V]
For DC switching	=	-
For AC switching	≈	-

BR.. - Spring loaded brake

Degree of protection IP55. The braking torque is adjustable with reduction of the springs (see page 277).

BR.. Spring loaded brake without additional options

Possible options:

BRH.. With manual release
BRHA.. With manual release and locking device
BRR.. With corrosion protection IP55
BRS.. With dust protection IP65
BRSR.. With dust and corrosion protection IP65
BRGD.. Low noise execution

Ordering examples:

BR5	Brake 5 Nm
BRHASRGD40	Brake 40 Nm with manual release, locking device, dust and corrosion protection and low noise execution

BRM - Micro switch

When brake release monitoring is necessary, a micro switch (5) can be fitted to indicate brake release. This signal can be used to start the electric motor. When air gap “a” (see page 275) is at its maximum and the armature is no longer attracted to the magnet body the motor will not start and air gap “a” must be adjusted.
The installation of the micro switch is possible for brakes > 5 Nm.

BRH.. - Manual release

The installation of the manual release is possible for brakes > 5 Nm. The manual release (1) is necessary for manually releasing the brake in cases of power failure. Brakes will be supplied with manual releases fitted by factory. The adjustment of the manual release may not be changed, not even when air gap “a” (see page 275) is readjusted, as safety can be adversely affected.

BRHA.. - Manual release with locking device

In case of service the manual release can be fastened with a locking device. Take care that in rated condition the brake is released (see illustration on page 280). The 0° position of the manual release with locking device is **only possible** with motor frame sizes 100, 160, 180 and 200.

BRR.. - Corrosion protection

Protection class IP55. Consists of painted brake endshield and friction plate (3), which is made of non-corrosive material.

BRS.. - Dust protection

Protection class IP65. Consists of friction plate (3), which is made of non-corrosive material, dust protection ring (2) and shaft seal.

BRSR.. - Corrosion and dust protection

Protection class IP65. Consists of painted brake endshield, friction plate (3), which is made of a non-corrosive material, dust protection ring (2) and shaft seal.

BRGD.. - Low noise execution

To reduce the switching noises of the spring loaded brake, the o-ring (4) can be inserted between armature plate and brake body.

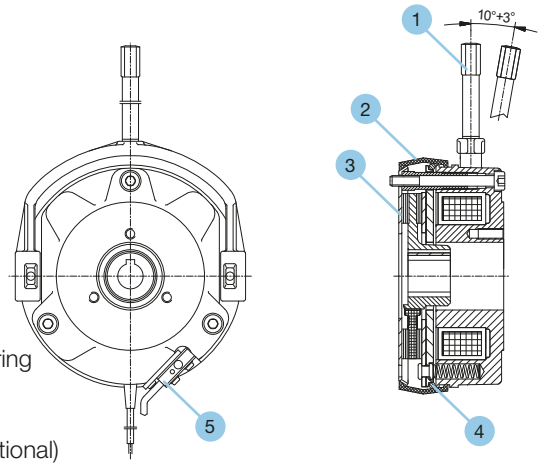

1 Manual release
2 Dust protection ring
3 Friction plate
4 O-ring
5 Micro switch (optional)

M

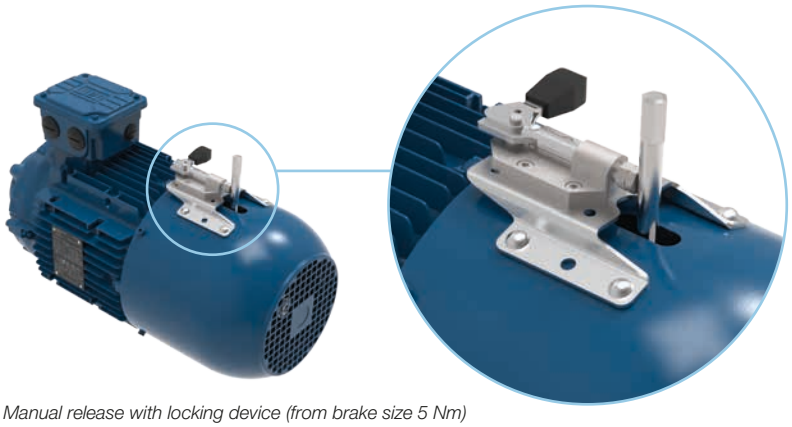

Manual release with locking device (from brake size 5 Nm)

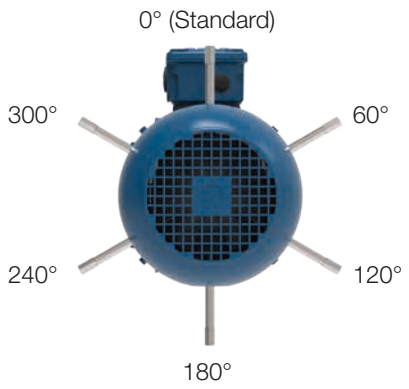

Possible positions of the manual release at the view of the motor fan cover. (The 0° position of the manual release with locking device is only possible with motor frame sizes 100 and from 160.)

BBRHGD.. - Double spring loaded brake

Double brakes (from motor frame size 71) are two specially designed low noise brakes working independently of each other meeting high demands on safety.
As option a micro switch (5) is monitoring the function of the brakes. The brakes are executed per default in low noise execution and with manual release. Braking torque is adjustable with reduction of the springs (see page 277).

BBRHGD.. Double brake in low noise execution with manual release (standard)

Possible options:

BBRHSGD.. With dust protection IP65

BBRGD.. Without manual release

Ordering examples:

BBRHGD6 Double brake 2 x 6 Nm in low noise execution with manual release

BBRHSGD187 Double brake 2 x 187 Nm in low noise exec. with man. release and dust protection

M

BBRM - Micro switch

When brake release monitoring is necessary, a micro switch (5) can be fitted to indicate brake release. This signal can be used to start the electric motor. When air gap “a” (see page 275) is at its maximum and the armature is no longer attracted to the magnet body the motor will not start and air gap “a” must be re-adjusted.

BBRHSGD.. - Dust protection

Protection class IP65. Consists of friction plate (3), which is made of non-corrosive material, dust protection ring (2) and shaft seal.

BBRHGD.. - Manual release

The manual release (1) for manually releasing of the brake in cases of power failure. Brakes will be supplied in standard with manual release fitted by factory. The adjustment of the manual release may not be changed, not even when air gap “a” (see page 275) is readjusted, as security can be adversely affected.

Possible positions of the manual release see on page 280.

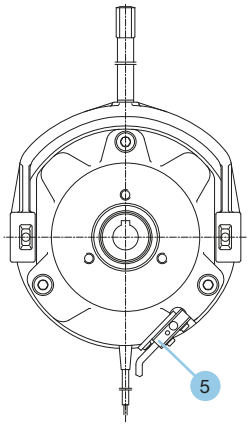

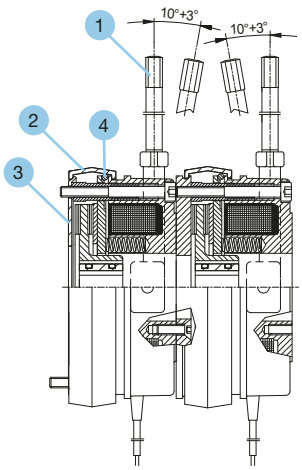

1 Manual release
2 Dust protection ring
3 Friction plate
4 O-ring
5 Micro switch (optional)

BRGH - Totally closed spring loaded brake „heavy duty“

The fully capsulated brake design with dust and waterproof cable glands is in accordance with protection degree IP66. On ventilated motor executions IC411 the shaft passage is sealed by sealrings. The brake is executed with manual release in standard. On the brake disc a lining for high loads is fitted. Brake selection table see page 277.

BRGH.. Totally closed spring loaded brake with manual release

Possible options:

BRGHA.. With manual release and locking device

BRG.. Without manual release

Ordering examples:

BRGH10 Brake 10 Nm with manual release

BRGHA150 Brake 150 Nm with manual release and locking device

BRGH.. - Manual release

The manual release (1) is necessary for manually releasing the brake in cases of power failure. Brakes will be supplied in standard with manual release fitted by factory.
The adjustment of the manual release may not be changed, not even when air gap “a” (see page 275) is readjusted, as safety can be adversely affected.

Possible positions of the manual release see on page 280.

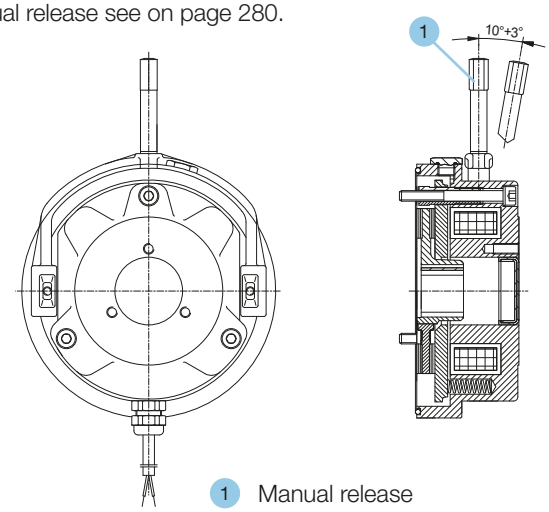

1 Manual release

Anti-condensation heating for brakes

When operating at conditions of extreme temperature changes or extreme climatic conditions, the windings are endangered of condensation water. The built in anti-condensation heater warms up the magnet windings after switching off and prevents the brakes inside from condensation water.
The anti-condensation heating must be supplied with a separate voltage.
Supply voltage 230 V (1~)
Voltage range: 220 - 230 V, 50/60 Hz

Brake size [Nm]	Performance [W]
10	16
20	29
40	33
60	35
100	48
150	53
250	70
400	128

Calculation of the brake torque

If the mass moment of inertia, the rotation speed and the permissible braking time of the machine are known, the torque of the spring loaded brake can be calculated.

	Formula	Unit
Load moment (static load)	$M_L = F \cdot r$	[Nm]
Braking torque (dynamic load) There is a pure dynamic load if fly-wheels, rolls, etc. have to be slowed down and when the static load is very insignificant.	$M_a = 1{,}046 \cdot 10^2 \cdot J_{zus} \cdot \frac{n}{t - t_1}$ $M_{aerf} = M_a \cdot K \leq M_B$	[Nm]
Braking torque (dynamic and static load) n most applications there is also dynamic load in addition to static load.	$M_{aerf} = (M_a \pm M_L) \cdot K$ $M_{aerf} = (1{,}046 \cdot 10^2 \cdot J_{zus} \cdot \frac{n}{t_B} \pm M_L) \cdot K$ $M_{aerf} \leq M_B$	[Nm]
Estimated determination of braking torque	$M_{aerf} = 9{,}55 \cdot 10^3 \cdot \frac{P}{n} \cdot K$ $M_{aerf} \leq M_B$	[Nm]
Deceleration time	$t = t_B + t_1$	[ms]
Acceleration time	$t_A = \frac{J_{ges} \cdot n_1}{9{,}55 \cdot (M_A \pm M_L)} + t_2$ $J_{ges} = J_E + J_{zus}$	[s] [kgm²]
Braking time	$t_B = \frac{J_{ges} \cdot n_1}{9{,}55 \cdot (M_A \pm M_L)}$ $J_{ges} = J_E + J_{zus}$	[s] [kgm²]
The conversion of several mass moments of inertia with different rotation speeds in a mass moment of inertia reduced to the motor shaft	$J_{zus} = \frac{J_2 \cdot n_2^2 + J_3 \cdot n_3^2 \ldots}{n_1^2}$	[kgm²]
Conversion of straight-line moved machine parts into a corresponding J on the motor shaft	$J = 91{,}2 \cdot m \cdot \frac{v^2}{n_1^2}$	[kgm²]
Friction per switch cycle	$W_R = \frac{J_{zus} \cdot n^2}{182{,}5} \cdot \frac{M_B}{M_B \pm M_L}$ $W_R < W_{Rmax}$	[J]
Friction performance	$P_R = W_R \cdot S$ $P_R < P_{Rmax}$	[J/s]

Designation	Unit	Description
M_L	[Nm]	Load moment Sign + : when the load moment acts decelerating (lifts when going up) Sign - : when the load moment acts accelerating (lifts when going down)
M_{aerf}	[Nm]	Necessary braking torque
M_a	[Nm]	Braking torque
M_A	[Nm]	Starting torque of motor
M_B	[Nm]	Rated torque of spring loaded brake
K	-	Safety factor according to the operating conditions (1...3)
F	[N]	Force
F_I	-	Factor of inertia
r	[m]	Lever arm
m	[kg]	Mass of moved machine parts
J, J_1, J_2	[kgm²]	Mass moment of inertia
J_E	[kgm²]	Proper mass moment of inertia
J_{ges}	[kgm²]	Total mass moment of inertia
J_{mot}	[kgm²]	Mass moment of inertia of the motor

Designation	Unit	Description
J_{zus}	[kgm²]	Additional mass moment of inertia
K	-	Safety factor K ≥ 2
P	[kW]	Power
P_R	[J/s]	Friction performance
P_{Rmax}	[J/s]	Maximum friction performance
n	[min^{-1}]	Rotation speed
n_1	[min^{-1}]	Rotation speed of motor
n_2, n_3	[min^{-1}]	Rotation speeds
t	[ms]	Deceleration time
t_A	[s]	Acceleration time
t_B	[s]	Braking time
t_1	[ms]	Engaging time
t_2	[ms]	Release time of brake
v	[m/s]	Speed
W_R	[J]	Friction work per switch cycle
W_{Rmax}	[J]	Permissible friction per switch cycle
S	[s^{-1}]	Number of switch cycle per second

Rectifier

Power supply

The DC-brake coil is normally supplied by a half wave rectifier incorporated in the motor terminal box and is also available for coil voltages 162-236 V DC, 85-133 V DC or 24 V DC (24 V with block terminal for external power supply!) Corresponding rectifiers and coil voltages are optionally available for all special voltages. The rectifiers are equipped with varistors to protect them against over-voltages.
At number of starts more than 1/s, please contact us for rectifier loading capacity.

Switching modes

By default brake motors will be delivered with connected rectifier for AC-side switching. For DC-side switching the bridge between terminals 5 and 6 must be removed and a switching contact must be connected. Start-up of motor only with connecting brake.

- **AC-side switching** *is executed before the rectifier on AC-side. Here the magnetic field is de-energised slowly, the brake interrupts softly with delay. (Release time t_1≈)*

- **DC-side switching** *is executed between rectifier and coil. Thereby an extremely low degree of overrunning is achieved. For all gear units, which require exact braking, especially for lifting gears, a DC-side switching of the brake is absolutely required. (Release time t_1=)*

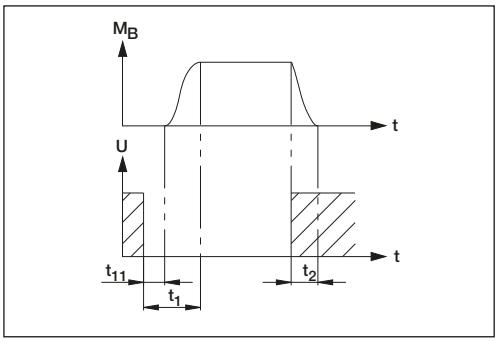

	Designation	Unit
Braking torque	M_B	[Nm]
Voltage	U	[V DC]
Engaging time	t_1	[ms]
Response delay (time from switching power off until braking torque increases)	t_{11}	[ms]
Release time (time from switching power on until braking torque begins to decrease)	t_2	[ms]

Rectifier selection

- *Half-wave and bridge rectifier*

The half wave rectifier which halves the supply voltage is the most cost effective. The bridge rectifier produces 90 % DC voltage from the AC supply voltage. Both rectifiers are available for switching on AC or DC side. Varistors in the input and output protect the rectifiers against surge voltages.

Half-wave rectifier: $U_{2=} = 0.45 \times U_{1\sim}$ $I_{max} = 1$ A

Bridge rectifier: $U_{2=} = 0.9 \times U_{1\sim}$ $I_{max} = 2$ A

- *Fast excitation rectifier*

For motor frame sizes 63-132 this rectifier can't be installed in the standard terminal box.
The high-speed rectifier uses special connections to make different direct voltages available on the terminals. This means that the following brake operating modes can be selected:

1. Rapid response: Brake voltage level equal to the holding voltage of the fast excitation rectifier: The ventilation time of the brake is reduced.
2. Power reduction: Brake voltage level equal to overexcitation voltage of the fast excitation rectifier: reduced performance losses in the brake coil, engage time of the brake is reduced.

Max. connection voltage: $U_1\sim$ = 500 V AC
Max. permissible connections: 600 connections/h
Max. permissible switching capacity: 210 W

Rectifier type	System	U_N [V]	I_N [A]
FBGR-E500/220-GS	Half-wave rectifier	500	1
FBGR-B400/345-GS	Bridge rectifier	400	2
FBGR-S500/220-GS480	Fast excitiation rectifier	500	2

Overexcitation phase (voltage)	T = 0 - 500 ms (± 200 ms)	$U_{2=} = 0.9 \times U_{1\sim}$	$I_N = 4$ A
Holding phase (voltage)	T > 500 ms	$U_{2=} = 0.45 \times U_{1\sim}$	$I_N = 2$ A

Connection examples

3~ U_N [V]	Connection	U_1~ [V]	Rectifier type	Designation U_1~	U_2= [V]	Brake coil voltage [V]
380-420-480	Δ	380-420-480	FBGR-E500/220-GS	480 V~	169-187-214	195 (162-236)
380-420-480	Y	380-400-480	FBGR-E500/220-GS	480 V~	169-187-214	195 (162-236)
660-690-725	Y	380-400-420	FBGR-E500/220-GS	480 V~	169-187-214	195 (162-236)
220-240	Δ	220-240	FBGR-B400/345-GS	230 V~	195-214	195 (162-236)
330-365-415	YY	190-210-240	FBGR-B400/345-GS	230 V~	169-187-214	195 (162-236)
190-210-240	ΔΔ	190-210-240	FBGR-B400/345-GS	230 V~	169-187-214	195 (162-236)
500	Δ	500	FBGR-E500/220-GS	480 V~	223	195 (162-236)
380-420-480	Y	220-240-280	FBGR-E500/220-GS	480 V~	98-107-125	102 (85-133) [1)]
220-240-280	Δ	220-240-280	FBGR-E500/220-GS	480 V~	98-107-125	102 (85-133) [1)]
330-365-415	YY	190-210-240	FBGR-E500/220-GS	480 V~	85-94-107	102 (85-133) [1)]
190-210-240	ΔΔ	190-210-240	FBGR-E500/220-GS	480 V~	85-94-107	102 (85-133) [1)]
500	Y	290	FBGR-E500/220-GS	480 V~	129	102 (85-133) [1)]

standard brake

[1)] special execution

	Designation	Unit
Maximum rated output current DC rectifier	I_N	[A]
3~ rated motor voltage	3~ U_N	[V]
Maximum rated input voltage AC rectifier	U_N	[V]
Supply voltage AC rectifier	U_1~	[V]
Output voltage DC rectifier	U_2=	[V]

Switching diagram for braking motor (star-delta connection)

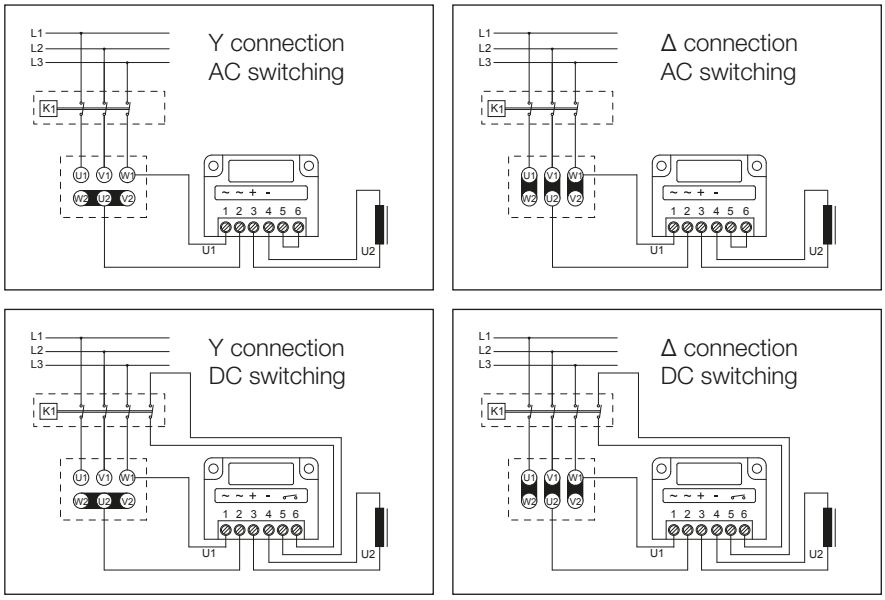

Back stop

Installing a back stop guarantees that the motor
a. can start only in one direction
b. can't be turned in wrong direction from counteract torques

KKM	Back stop (IEC frame size 63 to 90)
RSM	Back stop (IEC frame size 100 to 200)

The applied free wheels of the clamping bodies are mounted on the motor endshield (NDE) in such a manner, that the standard motor dimension LB up to motor size 90 will not be lengthened. From motor size 100 the motor dimension LB1 is valid.
The back stop has been largely dimensioned and corresponds approx. to the motor starting torque (M_A) to prevent a damage in case of short-time-starting against the back stop at switchings made by error. Nevertheless, the free direction of rotation must be determined first, especially at big motor powers and we recommend for the first starting the star connection and only then the delta connection at correct rotation.

Fields of application:

- Drives for elevators and inclined lifts
- Pumps and fans with backpressure ratchet
- Gearmotors for conveyors with non-reverse characteristic

KKM - Back stop (ball bearing free-wheelings)

The elements have bearing characteristics and are used instead of the bearing on the fan side. The outer dimensions are identical to the deep-groove ball bearings.

- *Function*

Rolling elements and spring loaded clamping bodies are built in between inner and outer ring. The rolling elements and ratchet elements are fixed in a plastic cage. Torque transmitting is made by tight fits on the inner and outer ring.
The elements are grease prelubricated. They are maintenance-free for 10,000 to 20,000 hours under normal working conditions.

- *Mounting*

The KKM back stop will be mounted instead of the bearing on the non-driven side.

RSM - Back stop (with centrifugal mechanism)

Because the mounted back stops have no bearing properties, they are mounted directly near the non-drive bearing. Above the lifting speed the centrifugal elements are working contactless and so they are maintenance free under normal conditions.

- *Mounting*

The centrifugal elements are mounted directly near the non-driven side bearing between bearing and fan under the fan cover. The inner ring of the back stop is connected with the shaft with a key DIN 6885-1.

- *Direction of rotation*

The direction of rotation has to be given with the ordering.

- *Back stop direction*

Back stop direction at a view on output shaft right or left.
By turning the entire back stop system by 180°, the back stop direction can be reversed (applies only for RSM!).

back stop direction left

back stop direction right

Back stop overview

IEC frame size	Back stop type	Torque [Nm]	Motor length dimension (see page 266)
63	KKM	7.4	LB
71	KKM	13.5	LB
80	KKM	40	LB
90	KKM	68	LB
100	RSM	150	LB1
112	RSM	150	LB1
132	RSM	390	LB1
160	RSM	580	LB1
180	RSM	580	LB1
200	RSM	1050	LB1

Encoder systems

I.	Encoder outside the fan cover (IEC frame sizes 63 to 200)
S.	Encoder inside the fan cover (IEC frame sizes 71 to 200)

Possible versions:

Encoder outside the fan cover		**Encoder inside the fan cover**	
IG	Standard encoder	**SG**	Standard encoder
IC	SINCOS encoder	**SC**	SINCOS encoder
IR	Resolver	**SR**	Resolver
IS	SSI multiturn encoder	**SS**	SSI multiturn encoder
IV	Heavy Duty encoder	**SV**	Heavy Duty encoder
IA	Special encoder	**SA**	Special encoder

Encoder outside the fan cover

Standard position connector (M23)

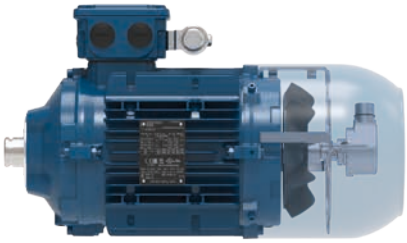

Encoder inside the fan cover

M

Modular design

We are using encoders with hollow shaft (ø 12 mm) open at one end. The modular motor shafts are fit to attach an encoder set. The mounting of encoders therefore is easy and immediately possible. Add-on kits are easy to retrofit.

Mounting of encoders

The encoders are equipped with an integral bearing and connected directly on the non-driven motor shaft side. During angular acceleration of the shaft the stator coupling must absorb only the torque resulting from friction in the bearing.

IG, SG - Standard encoder

Type: Kübler Sendix 5020
Pulses per revolution: 1024
Output signal: HTL or TTL
Voltage supply: 10-30 V at HTL, 5 V at TTL
Degree of protection: IP66
IG standard: with PIN connector (M23) on the encoder
SG standard: with PIN connector (M23) on the terminal box (mating connector not included in delivery)

Other numbers of pulses per revolution on request.

IC, SC - SINCOS encoder

Pulses per revolution: 1024
Output signal: Sinus 1VSS
Voltage supply: 10-30 V or 5 V
IC standard: with PIN connector (M23) on the encoder
SC standard: with PIN connector (M23) on the terminal box (mating connector not included in delivery)

Other numbers of pulses per revolution on request.

Encoders in standard mechanical designs can also be implemented as electric SINCOS versions. In this case, signals A and B are available on the output as sinusoidal voltage signals with a signal level of 1 VSS or one 0 pulse once per rotation. These can be used in many different ways in the downstream electronics. Via interpolation of the two signals shifted by 90°, very high resolutions are achieved and can therefore also be used with very slow movements for speed control.

IR, SR - Resolver

Degree of protection: IP54 (IP66 on request)
IR standard: with 0.6 m cable (open one way, 6 strands)
SR standard: with 0.6 m cable (open one way, 6 strands)

Resolvers are primarily 2-pole, electromagnetic measuring transducers for converting the angle position of a rotor into an electrical value. Resolvers are wear-free and robust, as the most important elements for acquiring the information consist only of iron core and copper coils. Contamination therefore plays a lesser role.
The configuration consists of 2 stator coils positioned at an offset of 90° (S1/S3 and S2/S4) and a rotating rotor coil (R1/R2).
In this process, the rotor coil supply is inductive, in other words, brushless.
The R1/R2 rotor coil is excited using a sinusoidal alternating voltage. The amplitudes of the voltages induced in stator coils S1/S3 and S2/S4 depend on the rotor angle.

Input voltage: $E_{(R1/R2)} = E \times \sin(\omega t)$

Output: $E_{(S1/S3)} = T_r \times E_{(R1/R2)} \times \cos(\varphi)$
$E_{(S2/S4)} = T_r \times E_{(R1/R2)} \times \sin(\varphi)$

Standard input voltage: $E_{(R1/R2)} = 7$ V
Standard transformation ratio: $T_r = 0.5$

IS, SS - SSI multi turn encoder

Digits per revolution: 8192 at 4096 possible rotations
Output signal: TTL
Voltage supply: 5 V
Degree of protection: IP66
SS standard execution: with PIN connector on the terminal box

The SSI multiturn absolute encoder signalises a single exactly defined position to the drive frequency controller. Maximum permissable number of motor revolutions can be 4096. The resolution is 8192 steps per revolution. The serial communication is corresponding to the specification of the SSI-protocol. SSI means Synchronous Serial Interface.

The permissible cable length is 100 m at least if EMC-compatible wiring is guaranteed.

IV, SV - Heavy Duty encoder

Possible for IEC frame sizes 90 to 200
Pulses per revolution: 1024
Output signal: HTL or TTL
Voltage supply: 10 - 30 V at HTL, 5 V at TTL
Degree of protection: IP65
Optional insulation inserts available to protect against shaft currents.

The Heavy Duty encoder boasts a high degree of ruggedness in a very compact design. Its special construction makes it perfect for all applications in very harsh environments.

IA, SA - Special encoder

The mounting of special encoders is possible on request.

Type of signal

- **HTL-/TTL - output signal**

  Encoders with HTL/TTL square-wave output signals incorporate a circuit that digitises scanning signals, providing two 90° (el.) phase-shifted HTL-/TTL square-wave pulse trains U_{a1} and U_{a2} and a reference pulse U_{a0}, which is gated with the incremental signals U_{a1} and U_{a2}. The integrated electronics also generate the inverse signals of all square-wave pulse trains. The distance between two successive edges of the combined pulse trains U_{a1} and U_{a2} is one measuring step. HTL/TTL square-wave signals can be transmitted to the subsequent electronics (without inverting: max. cable length 100 m; with inverting: 250 m), provided that the specified 5 V ± 5 % supply voltage is maintained at the encoder. Extended cable length is possible with fiber-optic cable.

- **1VPP - output signals**

  The sinusoidal incremental signals U_{a1} and U_{a2} are phase-shifted by 90° and have signal levels of approximately 1VPP. The signal peaks from the reference mark signal have a usable component of approximately 0.5 V.
  Signal interpolation and digitalisation can be performed by electronics, which output TTL-compatible signals.

Voltage signals can be transmitted to the subsequent electronics unit over cables as long as 50 m, provided that the specified 5 V ± 5 % supply voltage is maintained at the encoder. Encoders that produce voltage signals have sensor line connections for detection of the supply voltage at the encoder; corresponding control systems in the subsequent electronics can then maintain the voltage tolerance.

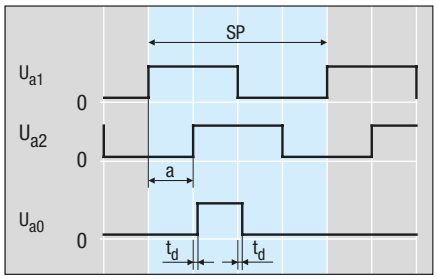

HTL/TTL

HTL signal levels
$U_H \geq 2.1$ V at $I_H = 20$ mA
$U_L \leq 2.8$ V at $I_L = 20$ mA
with power supply +24 V, without cable

TTL signal levels
$U_H \geq 2.5$ V at $I_H = 20$ mA
$U_L \leq 0.5$ V at $I_L = 20$ mA

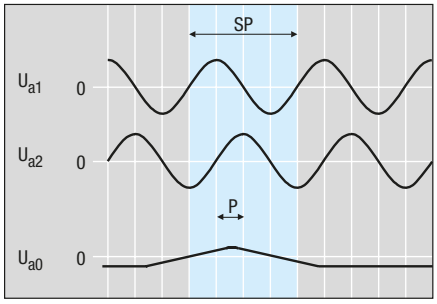

1VSS

	Designation
Encoder signals	U_{a1} , U_{a2}
Reference pulse	U_{a0}
Signal level HIGH	U_H
Signal level LOW	U_L
Edge separation	a
Phase shift	P
Current at signal level HIGH	I_H
Current at signal level LOW	I_L
Signal period	SP
Delay time	t_d

M

Ventilation systems

FL	Forced ventilation
ZL	Fly wheel fan
ZM	Metal fan
U	Non-ventilated without NDE shaft end
UW	Non-ventilated with NDE shaft end

FL - Forced ventilation (TEFV, IC416)

IEC frame sizes: 63 to 200

At applications with high starting frequencies, startings against heavy masses, heavy alternating load and operations with frequency inverters, self ventilation of the motor sometimes will not be sufficient and forced ventilation is necessary.
At frequencies under 30 Hz forced ventilation is recommended in order not to thermally overstrain the motor.

Forced ventilation currents (2 pole ventilation motor)

IEC frame size	Phases Con-nection	Capacitor	50 Hz					60 Hz				
			Voltage range	Current	Power	Air current ca-pacity	Noise level	Voltage range	Current	Power	Air current ca-pacity	Noise level
		µF	V	A[1)]	W[1)]	m³/h	db(A)	V	A[1)]	W[1)]	m³/h	dB(A)
63	3~Y	-	346-525	0.09	28	54	47	380-575	0.08	29	69	52
	3~Δ	-	200-303	0.15	28			220-332	0.14	29		
	1~⊥Δ	1.5	230-277	0.18	46			230-277	0.21	54		
71	3~Y	-	346-525	0.09	29	78	51	380-575	0.07	28	99	56
	3~Δ	-	200-303	0.15	29			220-332	0.13	28		
	1~⊥Δ	1.5	230-277	0.18	48			230-277	0.21	56		
80	3~Y	-	346-525	0.09	33	128	54	380-575	0.07	36	151	58
	3~Δ	-	200-303	0.16	33			220-332	0.13	36		
	1~⊥Δ	1.5	230-277	0.19	48			230-277	0.22	59		
90	3~Y	-	346-525	0.22	78	216	59	380-575	0.18	71	258	63
	3~Δ	-	200-303	0.39	78			220-332	0.32	71		
	1~⊥Δ	3.0	220-277	0.29	59			220-277	0.23	61		
100	3~Y	-	346-525	0.21	80	278	60	380-575	0.18	80	328	65
	3~Δ	-	200-303	0.37	80			220-332	0.30	80		
	1~⊥Δ	3.0	220-277	0.29	62			220-277	0.28	73		
112	3~Y	-	346-525	0.20	87	355	62	380-575	0.17	93	418	66
	3~Δ	-	200-303	0.35	87			220-332	0.29	93		
	1~⊥Δ	3.0	220-277	0.27	64			220-277	0.36	88		
132	3~Y	-	346-525	0.37	160	550	67	380-575	0.32	180	650	71
	3~Δ	-	200-303	0.64	160			220-332	0.55	180		
	1~⊥Δ	6.0	230-277	0.52	125			230-277	0.61	163		
160	3~Y	-	346-525	0.74	314	980	73	380-575	0.62	391	1160	77
	3~Δ	-	200-303	1.28	314			220-332	1.08	391		
	1~⊥Δ	12	230-277	1.05	246			230-277	1.52	390		
180	3~Y	-	346-525	0.74	314	1200	74	380-575	0.62	391	1379	80
	3~Δ	-	200-303	1.28	314			220-332	1.08	391		
	1~⊥Δ	12	230-277	1.05	246			230-277	1.52	390		
200	3~Y	-	346-525	0.74	314	1324	74	380-575	0.62	391	1575	81
	3~Δ	-	200-303	1.28	314			220-332	1.08	391		
	1~⊥Δ	12	230-277	1.05	246			230-277	1.52	390		

1) maximum permissible values

M

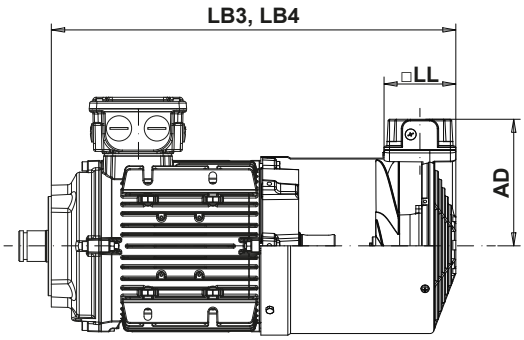

IEC frame size	AD	□LL
63	118	105
71	124	105
80	134	105
90	143	105
100	152	105
112	164	105
132	185	105
160	211	105
180	211	105
200	211	105

Dimensions in mm.
Dimensions LB3 and LB4 see drawings from page 266

ZL - Fly wheel fan

IEC frame sizes: 71 to 132 (special execution)

Fly wheel fans increase the inertial moment of the standard motors by a multiple and help to decrease the start up time of the motors. Motors with fly wheel fan often are used at crane drives or machine-systems where a soft start up is required. Available for motor sizes 71 to 132 on request, exchangeable without modification with standard fan, pay attention to the reduced starting frequency! Braking by reversal and driving up against a buffer stop is not permissible.

Motor without brake: $J_{ges} = J_{mot} + J_{ZL}$
Brake motor: $J_{ges} = J_{mot} + J_{ZL} + J_B$

	Designation	Unit
Total mass moment of inertia	J_{ges}	[kgm²]
Mass moment of motor	J_{mot}	[kgm²]
Mass moment of brake	J_B	[kgm²]
Mass moment of fly wheel fan	J_{ZL}	[kgm²]
Weight of fly wheel fan	m	[kg]

IEC frame size	J_{ZL} [kgm²] x 10^{-3}	m [kg]
71	2	1.3
80	2	1.3
90	3	1.6
100	10	3.3
112	10	3.3
132	14	3.8

M

ZM - Metal fan

Possible from frame size 71 as option

For ambient temperatures which are lesser than or greater than the operation temperatures of the standard plastic fan wheels, the ventilation can be provided via metal fan wheels. These can be manufactured from aluminium, steel plate or cast iron. Using a metal fan can be appropriate in the event of difficult climatic conditions.

U - Non-ventilated without NDE shaft end (TENV)

IEC frame size: 63 to 200

In this version, there is no fan or fan cover. The NDE is completely enclosed. A cover plate is used as the sealing component. This prevents dirt, water, etc. from entering the motor.

UW - Non-ventilated with NDE shaft end (TENV)

IEC frame size: 63 to 200

This design is realised by omitting the fan. The standard fan cover is used as contact protection for the remaining NDE rotating shaft. Motors of these designs are intended for use in systems where fans or fan covers integrated into the motor are not appropriate due to the environmental conditions, for design reasons or at the customer's request. The motors are therefore designed without integrated fans or fan covers.

In the non-ventilated version, the resulting reduction in nominal motor output must be observed!

Additional modules

HR	Hand wheel
SD	Protection cap
ID	Protection cap for encoders
ZWM	Second shaft end - module shaft
ZWV	Second shaft end - solid shaft

HR - Hand wheel
IEC frame sizes: 71 to 200

By using a second shaft end it is possible to fit a hand wheel.

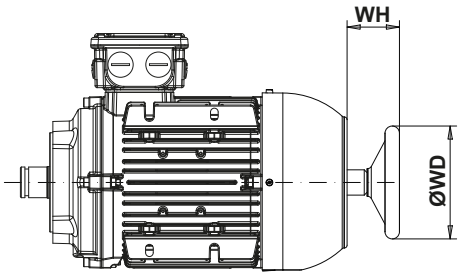

IEC frame size	ØWD	WH
71	125	51
80	125	51
90	125	51
100	125	51
112	125	51
132	200	60
160	200	60
180	200	60
200	200	60

Dimensions in mm.

SD - Protection cap
IEC frame sizes: 63 to 200

When installed vertically with the shaft downward, e.g. IM V1, the air intake opening can be protected against water and foreign substance by means of a protective cap.

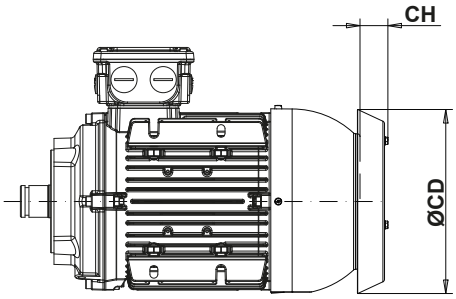

IEC frame size	ØCD	CH
63	124	20
71	139	20
80	157	20
90	176	20
100	197	32
112	219	35
132	254	35
160	266	52
180	310	57
200	380	67

Dimensions in mm.

ID - Protection cap for encoders
IEC frame sizes: 90 to 200

If mounted outside the fan cover, the encoder may be protected against foreign matter and other external influence by a separate protection cap.

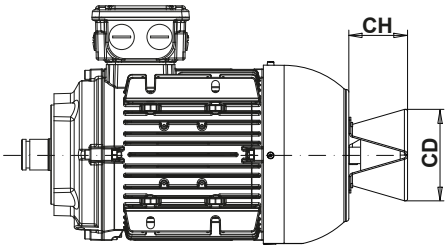

Protection cap for	CD	CH
IG standard encoder	74	116
IV Heavy Duty encoder	115	183

Dimensions in mm.

ZW. - Second shaft end

Motors with or without brake can be supplied with a second free shaft end.

ZWM: Module shaft
IEC frame sizes: 71 to 200. This shaft end can be used to transfer half the rated output of the motor.

ZWV: Solid shaft
IEC frame sizes: 63 to 200. Available on request.

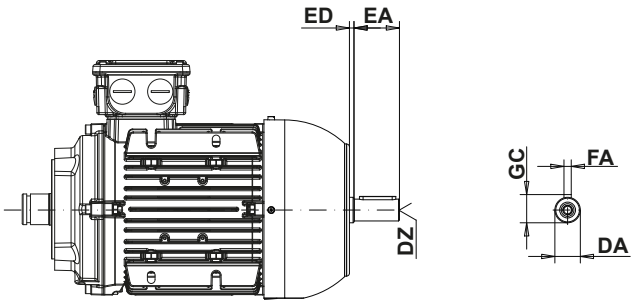

IEC frame size	DA	DZ [2]	EA	ED	FA	GC
63 [1]	11	M4	23	-	4	12.5
71	14	M5	30	5	5	16
80	14	M5	30	5	5	16
90	19	M6	40	5	6	21.5
100	24	M8	50	5	8	27
112	24	M8	50	5	8	27
132	28	M10	60	5	8	31
160	38	M12	80	5	10	41
180	38	M12	80	5	10	41
200	38	M12	80	5	10	41

Dimensions in mm. [1] ZWV only [2] centre hole with thread according to DIN 332-1

Tolerances		
Dimension name	ISO tolerance DIN EN ISO 286-2	
DA	≤ Ø 30 mm	j6
	> Ø 30 mm up to Ø 50 mm	k6

M

Standards

The motors comply with the competent standards and specifications, especially with the following:

Title	IEC	DIN / EN / VDE
Rotating electrical machines Rating and performance	IEC 60034-1 IEC 60085	DIN EN 60034-1
Standard methods for determining losses and efficiency from tests (excluding machines for traction vehicles)	IEC 60034-2-1	DIN EN 60034-2-1
Degrees of protection provided by integral design of rotating electrical machines (IP Code)	IEC 60034-5	DIN EN 60034-5
Methods of cooling (IC Code)	IEC 60034-6	DIN EN 60034-6
Classification of types of construction, mounting arrangements and terminal box position (IM Code)	IEC 60034-7	DIN EN 60034-7
Terminal markings and direction of rotation	IEC 60034-8	DIN EN 60034-8
Noise limits	IEC 60034-9	DIN EN 60034-9
Starting performance of single-speed three-phase cage induction motors	IEC 60034-12	DIN EN 60034-12
Mechanical vibration of certain machines with shaft heights 56 mm and higher - measurement, evaluation and limits of vibration severity	IEC 60034-14	DIN EN 60034-14
Dimensions and output series for rotating electrical machines	IEC 60072-1	DIN EN 50347
Thermal protection	IEC 60034-11	DIN EN 60034-11
CENELEC standard voltages	IEC 60038	DIN EN 60038

Know More

Excellence to enhance productivity

For us, excellence is to develop products and projects that increase the competetiveness of our customers, with a full range of electrical equipment, efficient and safe machines and clean and sustainable energy. We provide products with high performance and reliability to improve your production process from start to finish.

Visit: www.weg.net

youtube.com/wegvideos

WEG Worldwide Operations

ARGENTINA
San Francisco - Cordoba
Phone: +54 3564 421484
info-ar@weg.net

Cordoba - Cordoba
Phone: +54 3514 641366
weg-morbe@weg.com.ar

Buenos Aires
Phone: +54 1142 998000
ventas@pulverlux.com.ar

AUSTRALIA
Scoresby - Victoria
Phone: +61 3 97654600
info-au@weg.net

AUSTRIA
Markt Piesting - Niederösterreich
Phone: +43 2 633 4040
watt@wattdrive.com

Vienna
Phone: +43 1 796 2048
wtr@weg.net

BELGIUM
Nivelles - Belgium
Phone: +32 67 888420
info-be@weg.net

BRAZIL
Jaraguá do Sul - Santa Catarina
Phone: +55 47 32764000
info-br@weg.net

CHILE
La Reina - Santiago
Phone: +56 2 27848900
info-cl@weg.net

CHINA
Nantong - Jiangsu
Phone: +86 513 85989333
info-cn@weg.net

Changzhou - Jiangsu
Phone: +86 519 88067692
info-cn@weg.net

Rugao - Jiangsu
Phone: +86 513 80672011
zhuhua@weg.net

COLOMBIA
San Cayetano - Bogota
Phone: +57 1 4160166
info-co@weg.net

Sabaneta - Antioquia
Phone: +57 4 4449277
info-co@weg.net

ECUADOR
El Batan - Quito
Phone: +593 2 5144339
wegecuador@weg.net

FRANCE
Saint-Quentin-Fallavier - Isère
Phone: +33 4 74991135
info-fr@weg.net

GERMANY
Kerpen - North Rhine - Westphalia
Phone: +49 2237 92910
info-de@weg.net

Balingen - Baden-Württemberg
Phone: +49 7433 90410
info@weg-antriebe.de

Homberg (Efze) - Hesse
Phone: +49 5681 99520
info@akh-antriebstechnik.de

Unna - North Rhine - Westphalia
Phone: +49 2303 986870
info@wattdrive.de

Nuremberg - Bavaria
Phone: +49 911 239568-700
info@tgmkanis.com

GHANA
Accra
Phone: +233 30 2766490
ghana@zestweg.com

INDIA
Bangalore - Karnataka
Phone: +91 080 46437450
info-in@weg.net

Hosur - Tamil Nadu
Phone: +91 4344 301577
info-in@weg.net

ITALY
Cinisello Balsamo - Milano
Phone: +39 2 61293535
info-it@weg.net

JAPAN
Yokohama - Kanagawa
Phone: +81 45 5503030
info-jp@weg.net

MALAYSIA
Shah Alam - Selangor
Phone: +60 3 78591626
info-wsea@weg.net

MEXICO
Huehuetoca - Mexico
Phone: +52 55 53214275
info-mx@weg.net

Tizayuca - Hidalgo
Phone: +52 77 97963790
info-mx@weg.net

NETHERLANDS
Hengelo - Overijssel
Phone: +31 88 934 65 00
info-nl@weg.net

PERU
La Victoria - Lima
Phone: +51 1 2097600
info-pe@weg.net

PORTUGAL
Maia - Porto
Phone: +351 22 9477700
info-pt@weg.net

RUSSIA and CIS
Saint Petersburg
Phone: +7 812 363 2172
sales-wes@weg.net

SCANDINAVIA
Mölnlycke - Sweden
Phone: +46 31 888000
info-se@weg.net

SINGAPORE
Singapore
Phone: +65 68589081
info-sg@weg.net

Singapore
Phone: +65 68622220
info-sg@weg.net

SOUTH AFRICA
Johannesburg
Phone: +27 (0) 11 7236000
info@zestweg.com

SOUTH AFRICA
Cape Town
Phone: +27 (0) 21 5077200
gentsets@zestweg.com

Heidelberg
Phone: +27 (0) 16 349 2683/4/5
wta@zestweg.com

SPAIN
Coslada - Madrid
Phone: +34 91 6553008
info-es@weg.net

Paterna - Valencia
Phone: +34 96 1379296
info@autrial.es

UK
Redditch - Worcestershire
Phone: +44 1527 513800
info-uk@weg.net

UNITED ARAB EMIRATES
Jebel Ali - Dubai
Phone: +971 4 8130800
info-ae@weg.net

USA
Duluth - Georgia
Phone: +1 678 2492000
info-us@weg.net

McHenry - Illinois
Phone: +1 815 385-3500
sales@raemotors.com

Bluffton - Indiana
Phone: +1 800 5798527
info-us@weg.net

Minneapolis - Minnesota
Phone: +1 612 3788000
info-us@weg.net

Washington - Missouri
Phone: +1 636-2399-300
wegwill@weg.net

VENEZUELA
Valencia - Carabobo
Phone: +58 241 8210582
info-ve@weg.net

For those countries where there is not a WEG own operation, find our local distributor at www.weg.net and www.wattdrive.com

Watt Drive Antriebstechnik GmbH - WEG Group
Wöllersdorfer Straße 68 • 2753 Markt Piesting • Austria
Phone: +43 (0)2633/404-0
Fax: +43 (0)2633/404-200
watt@wattdrive.com
www.wattdrive.com • www.weg.net

Cod: 50076915 | Rev: 01 | Datum (M/J): 01/2019
The values shown are subject to change without prior notice.